YAMAHA

TT600R

M.Y 1997-2007

SERVICE MANUAL

EAS00007

HOW TO USE THIS MANUAL

This manual is intended as a handy, easy-to-read reference book for the mechanic. Comprehensive explanations of all installation, removal, disassembly, assembly, repair and check procedures are laid out with the individual steps in sequential order.

① The manual is divided into chapters. An abbreviation and symbol in the upper right corner of each page indicate the current chapter.
Refer to "SYMBOLS".

② Each chapter is divided into sections. The current section title is shown at the top of each page, except in Chapter 3 ("PERIODIC CHECKS AND ADJUSTMENTS"), where the sub-section title(s) appears.

③ Sub-section titles appear in smaller print than the section title.

④ To help identify parts and clarify procedure steps, there are exploded diagrams at the start of each removal and disassembly section.

⑤ Numbers are given in the order of the jobs in the exploded diagram. A circled number indicates a disassembly step.

⑥ Symbols indicate parts to be lubricated or replaced.
Refer to "SYMBOLS".

⑦ A job instruction chart accompanies the exploded diagram, providing the order of jobs, names of parts, notes in jobs, etc.

⑧ Jobs requiring more information (such as special tools and technical data) are described sequentially.

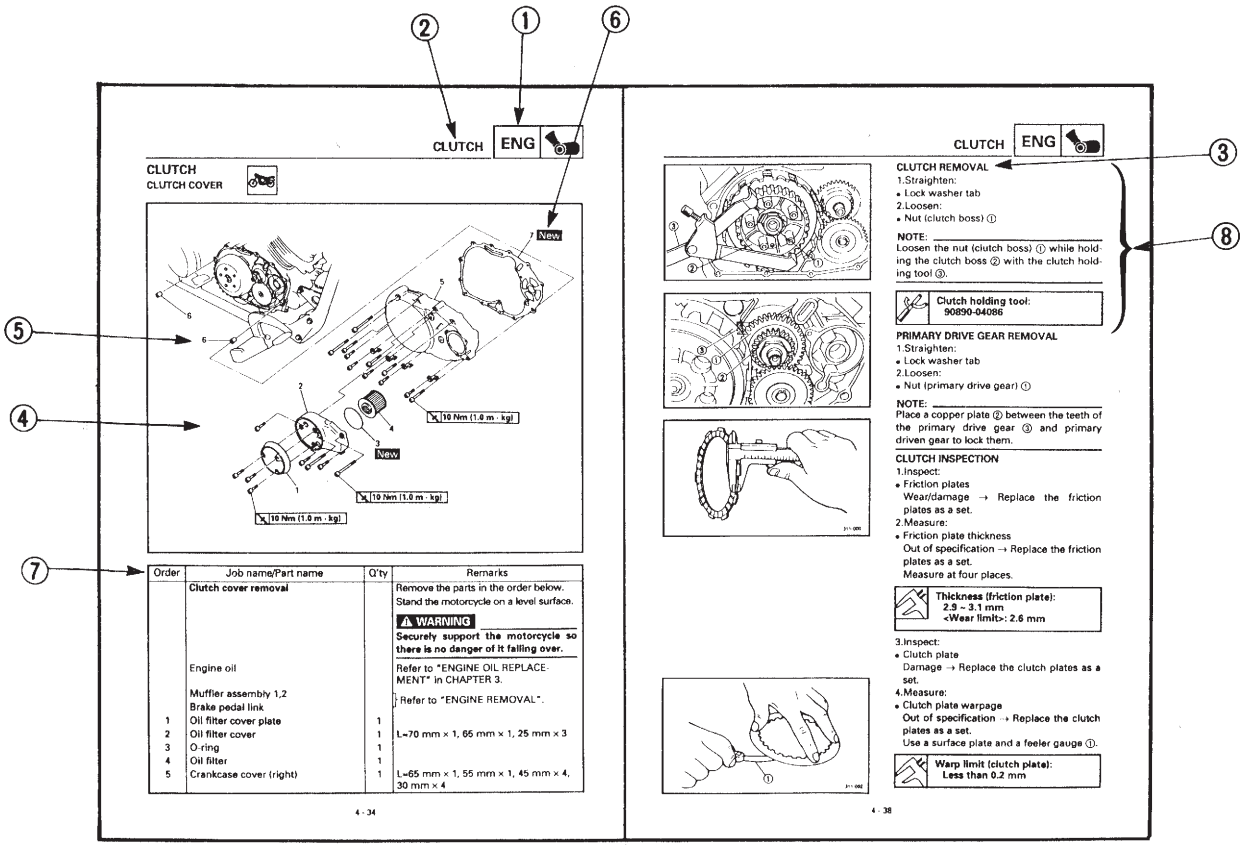

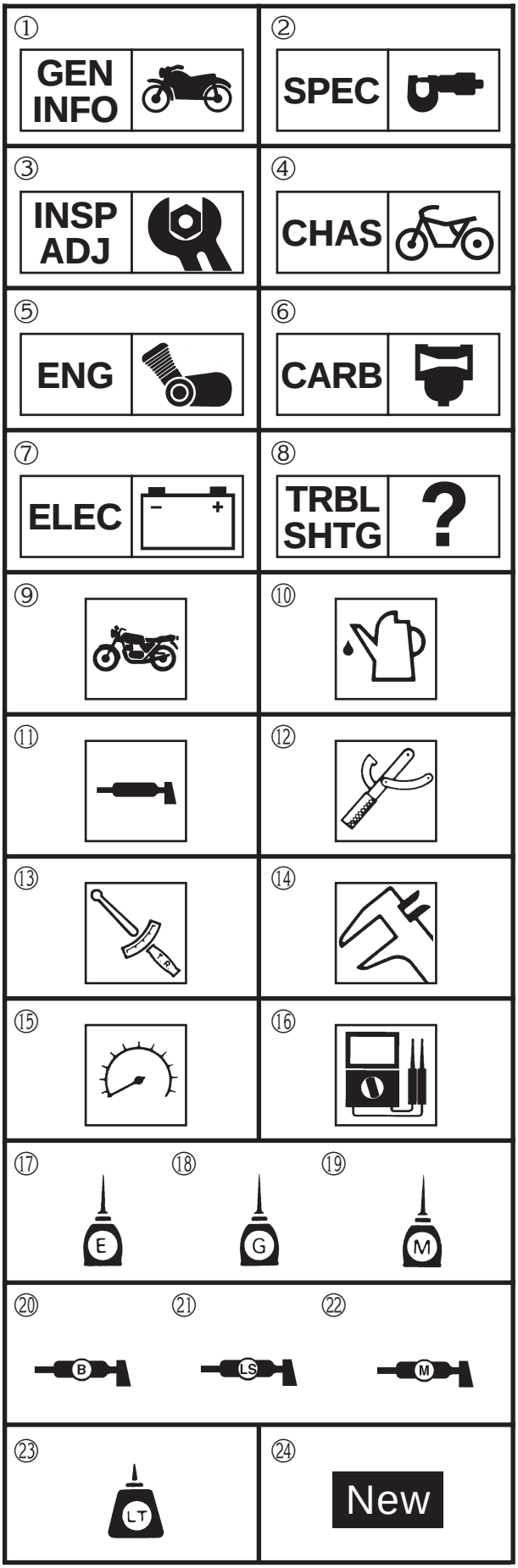

ILLUSTRATED SYMBOLS

The following symbols are not relevant to every vehicle.

Illustrated symbols ① to ⑧ are printed on the top right of each page and indicate the subject of each chapter.

① General information
② Specifications
③ Periodic inspections and adjustments
④ Chassis
⑤ Engine
⑥ Carburetor
⑦ Electrical system
⑧ Troubleshooting

Illustrated symbols ⑨ to ⑯ are used to identify the specifications appearing in the text.

⑨ Can be serviced with engine mounted
⑩ Filling fluid
⑪ Lubricant
⑫ Special tool
⑬ Torque
⑭ Wear limit, clearance
⑮ Engine speed
⑯ Electrical data

Illustrated symbols ⑰ to ㉒ in the exploded diagrams indicate the types of lubricants and lubrication points.

⑰ Apply engine oil
⑱ Apply gear oil
⑲ Apply molybdenum disulfide oil
⑳ Apply wheel bearing grease
㉑ Apply lightweight lithium-soap base grease
㉒ Apply molybdenum disulfide grease

Illustrated symbols ㉓ to ㉔ in the exploded diagrams indicate the following:

㉓ Apply locking agent (LOCTITE®)
㉔ Replace the part

E004000

TABLE OF CONTENTS

GENERAL INFORMATION	GEN INFO 1
SPECIFICATIONS	SPEC 2
PERIODIC INSPECTION AND ADJUSTMENTS	INSP ADJ 3
CHASSIS	CHAS 4
ENGINE	ENG 5
CARBURETION	CARB 6
ELECTRICAL	ELEC 7
TROUBLESHOOTING	TRBL SHTG 8

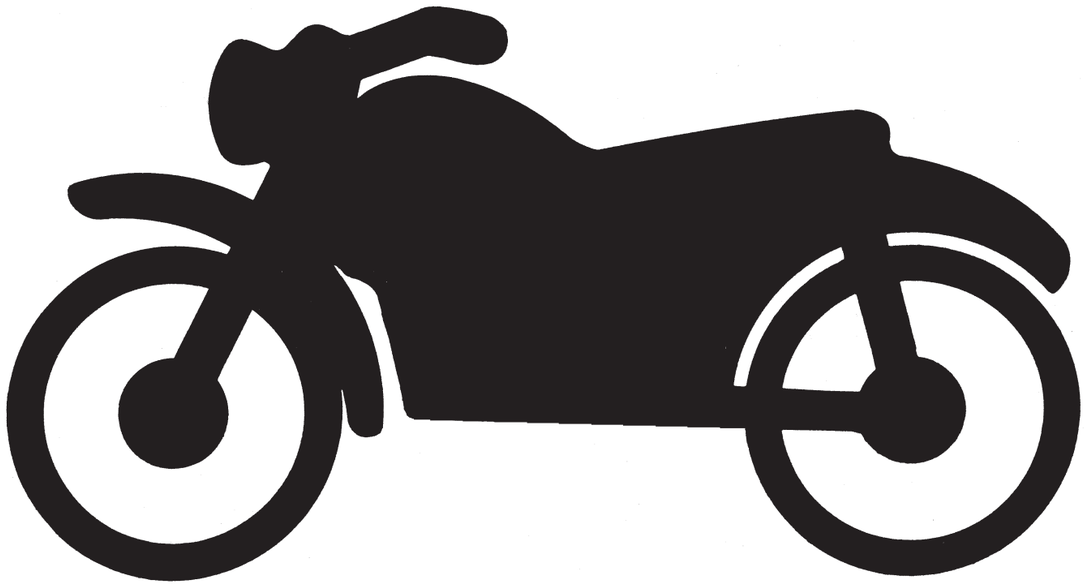

GEN INFO

1

CHAPTER 1.
GENERAL INFORMATION

MOTORCYCLE IDENTIFICATION 1-1
VEHICLE IDENTIFICATION NUMBER 1-1
MODEL LABEL 1-1

IMPORTANT INFORMATION 1-2
PREPARATION FOR REMOVAL PROCEDURES 1-2
REPLACEMENT PARTS 1-2
GASKETS, OIL SEALS AND O-RINGS 1-2
LOCK WASHERS/PLATES AND COTTER PINS 1-3
BEARINGS AND OIL SEALS 1-3
CIRCLIPS 1-3

CHECKING OF CONNECTIONS 1-4

SPECIAL TOOLS 1-5

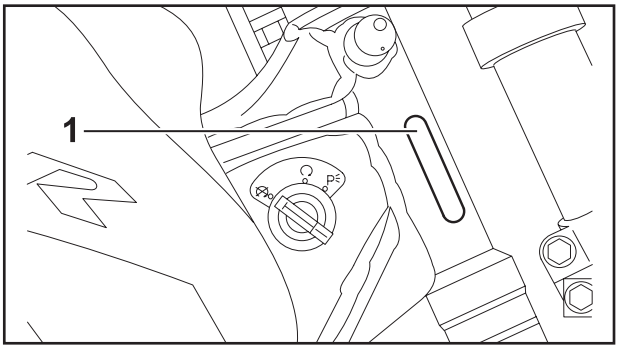

GENERAL INFORMATION

VEHICLE IDENTIFICATION

VEHICLE IDENTIFICATION NUMBER

The vehicle identification number ① is stamped into the frame.

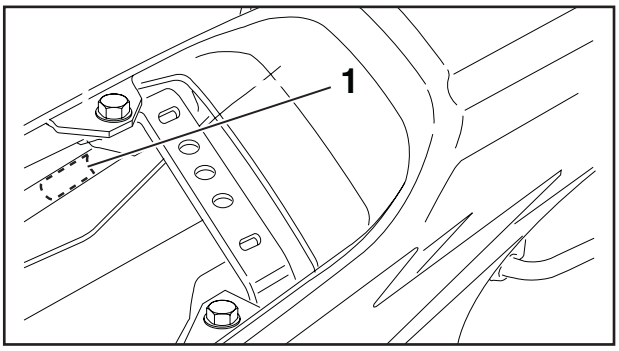

MODEL LABEL

The model label ① is affixed to the frame under the seat.
This information will be needed to order spare parts.

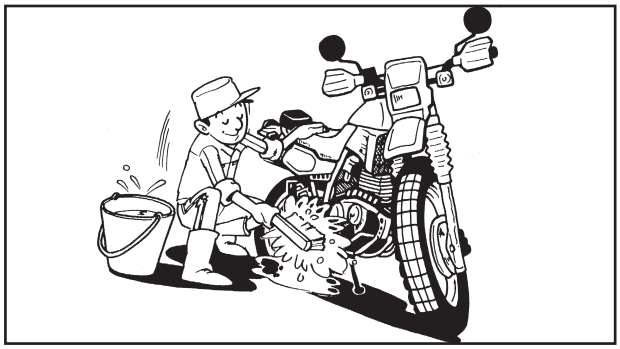

EB101000

IMPORTANT INFORMATION

PREPARATION FOR REMOVAL PROCEDURES

1. Remove all dirt, mud, dust and foreign material before removal and disassembly.

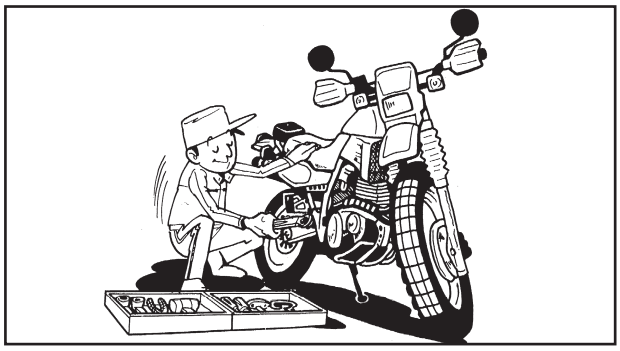

2. Use proper tools and cleaning equipment. Refer to the “SPECIAL TOOLS” section.
3. When disassembling the machine, always keep mated parts together. This includes gears, cylinders, pistons and other parts that have been “mated” through normal wear. Mated parts must always be reused or replaced as an assembly.
4. During machine disassembly, clean all parts and place them in trays in the order of disassembly. This will speed up assembly and allow for the correct installation of all parts.
5. Keep all parts away from any source of fire.

EB101010

REPLACEMENT PARTS

1. Use only genuine Yamaha parts for all replacements. Use oil and grease recommended by Yamaha for all lubrication jobs. Other brands may be similar in function and appearance, but inferior in quality.

EB101020

GASKETS, OIL SEALS AND O-RINGS

1. Replace all gaskets, seals and O-rings when overhauling the engine. All gasket surfaces, oil seal lips and O-rings must be cleaned.
2. Properly oil all mating parts and bearings during reassembly. Apply grease to the oil seal lips.

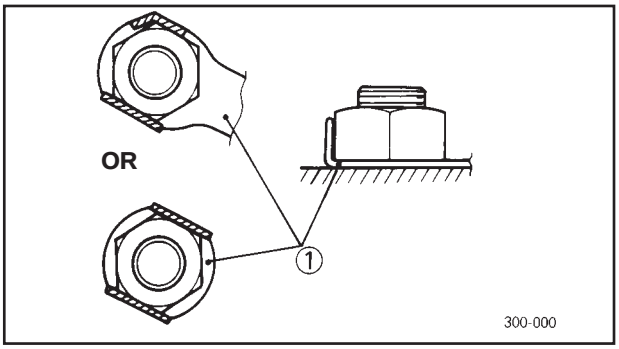

EB101030

LOCK WASHERS/PLATES AND COTTER PINS

1. Replace all lock washers/plates ① and cotter pins after removal. Bend lock tabs along the bolt or nut flats after the bolt or nut has been tightened to specification.

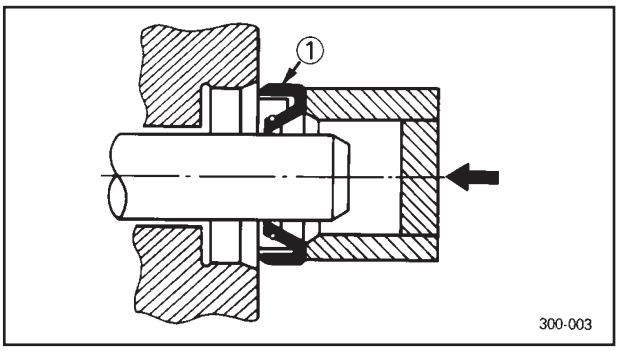

EB101040

BEARINGS AND OIL SEALS

1. Install bearings and oil seals so that the manufacturer's marks or numbers are visible. When installing oil seals, apply a light coating of lightweight lithium base grease to the seal lips. Oil bearings liberally when installing, if appropriate.

① Oil seal

CAUTION:

Do not use compressed air to spin the bearings dry. This will damage the bearing surfaces.

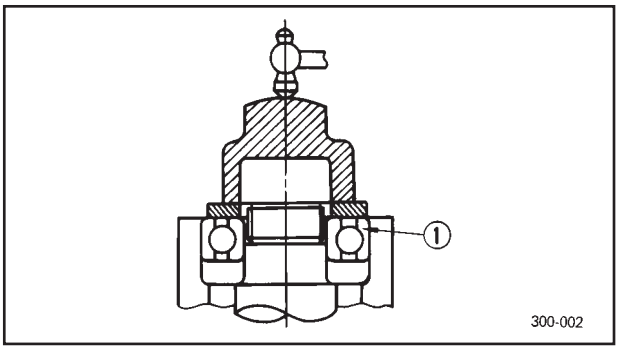

① Bearing

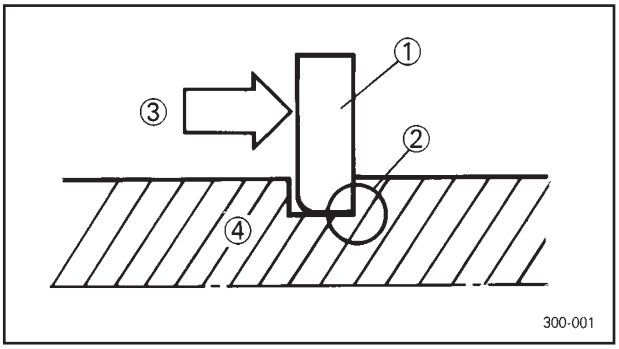

EB101050

CIRCLIPS

1. Check all circlips carefully before reassembly. Always replace piston pin clips after one use. Replace distorted circlips. When installing a circlip ①, make sure that the sharp-edged corner ② is positioned opposite the thrust ③ it receives. See sectional view.

④ Shaft

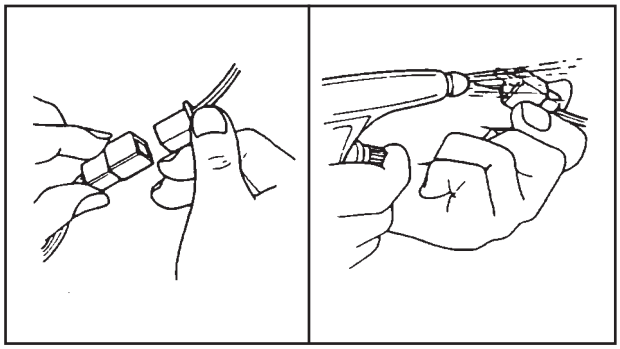

EB801000

CHECKING OF CONNECTIONS

Check the connectors for stains, rust, moisture, etc.

1. Disconnect:
   - connector
2. Check:
   - connector
     Moisture → Dry each terminal with an air blower.
     Stains/rust → Connect and disconnect the terminals several times.

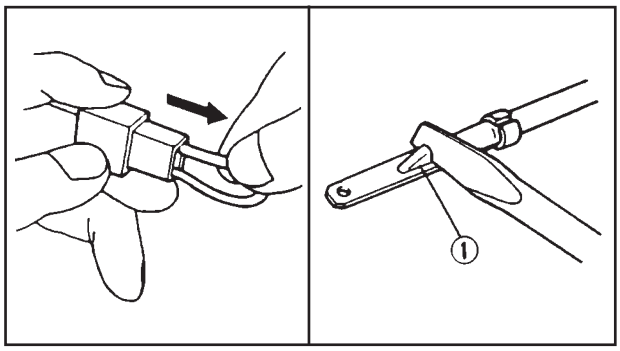

3. Check:
   - connector leads
     Looseness → Bend up the pin ① and connect the terminals.

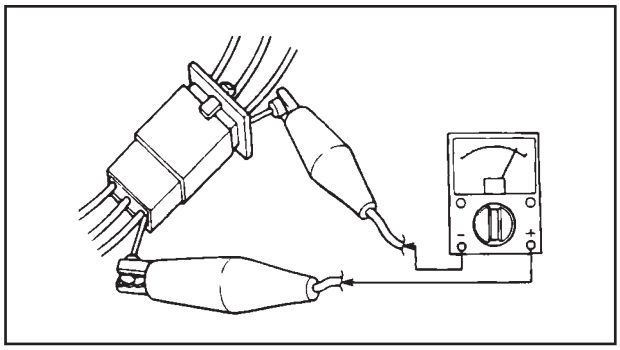

4. Connect:
   - connector terminals

NOTE:
The two terminals “click” together.

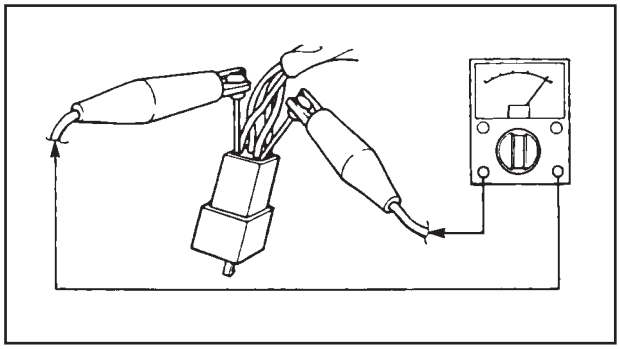

5. Check:
   - continuity (using a pocket tester)

NOTE:
- If there is no continuity, clean the terminals.
- When checking the wire harness be sure to perform steps 1 to 3.
- As a quick remedy, use a contact revitalizer available at most part stores.
- Check the connector with a pocket tester as shown.

SPECIAL TOOLS

The following special tools are necessary for complete and accurate tune-up and assembly. Use only the appropriate special tools; this will help prevent damage caused by the use of inappropriate tools or improvised techniques.
When placing an order, refer to the list provided below to avoid any mistakes.

Tool No.	Tool name / Usage	Illustration
90890-03113	Engine tachometer This tool is needed for detecting engine rpm.	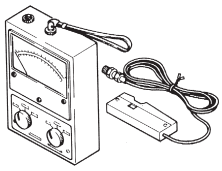
90890-03141	Timing light This tool is needed for detecting ignition timing.	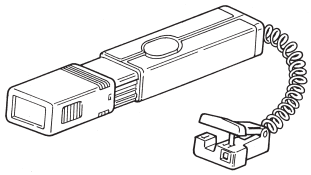
90890-03112	Pocket tester These instruments are invaluable for checking the electrical system.	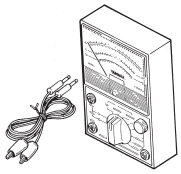
90890-06754	Ignition checker This instrument is necessary for checking the ignition system components.	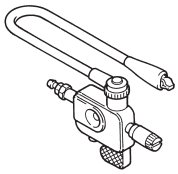
90890-03081	Compression gauge These tools are used to measure the engine compression.	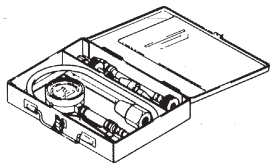
90890-04082	Adapter (compression gauge) This tool serves to measure the engine compression.	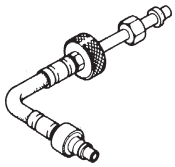
90890-01312	Fuel level gauge This gauge is used to measure the fuel level in the float chamber.	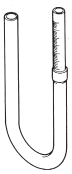
90890-01304	Piston pin clip puller This tool serves for removing the piston pin clip.	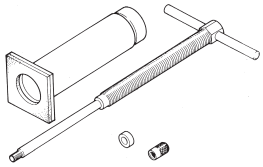

Tool No.	Tool name / Usage	Illustration
90890-01083	Rocker arm shaft puller bolt These tools are used when removing the rocker arm shafts.	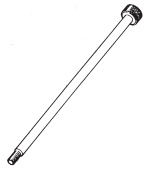
90890-01084	Weight These tools are used when removing the rocker arm shafts.	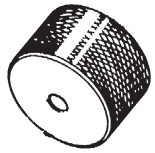
90890-04019	Valve spring compressor These tools are used when removing or installing the valve and the valve spring.	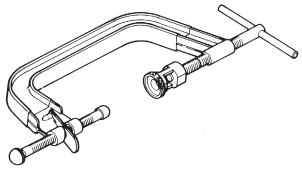
90890-01225	7 mm (0.28 in) valve guide puller This tool is used to remove the valve guides.	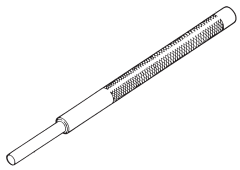
90890-04017	7 mm (0.28 in) valve guide installer This tool is necessary to install the valve slides properly.	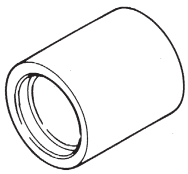
90890-01227	7 mm (0.28 in) valve guide reamer This tool is used to re-ream the new valve guide.	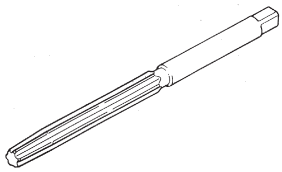
90890-01311	Valve adjusting tool This tool is necessary for adjusting valve clearance.	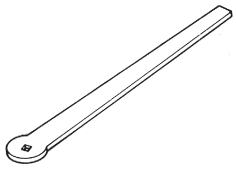
90890-01701	Rotor holder This tool is used for loosing and tightening the rotor nut.	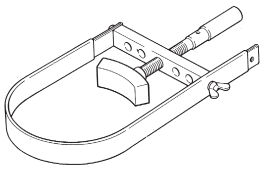
90890-01362	Rotor screw puller This tool is used to disassemble the magneto flywheel rotor.	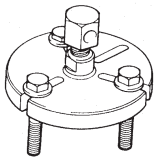

Tool No.	Tool name / Usage	Illustration
90890-04086	All-purpose clutch holder This tool is used to lock the clutch, when the clutch boss lock nut is being loosened or tightened.	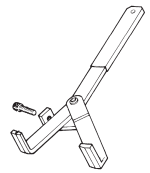
90890-01135	Crankcase separating tool This tool is necessary to disassemble the crankcase.	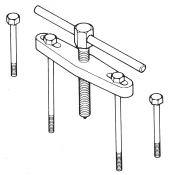
90890-01274	Crankshaft installation hose This tool is used to install the crankshaft.	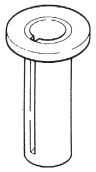
90890-01275	Crankshaft installation bolt This tool is used to install the crankshaft.	
90890-04059	#10 (M14) adapter This tool is used to install the crankshaft.	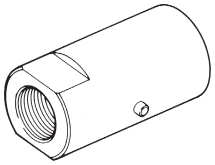
90890-04081	Crank spacer This tool is used to install the crankshaft.	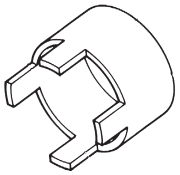
90890-85505	SEALANT (QUICK GASKET) ® Yamaha Bond No. 1215 ® This sealant (adhesive) is used for crankcase mating surfaces etc.	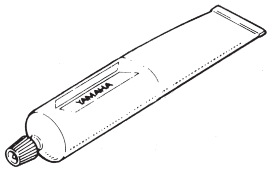
90890-01268	Ringnut wrench This tool is used to loosen and tighten the steering ringnut.	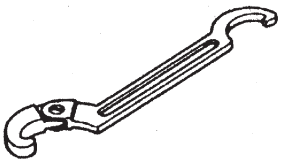
90890-01348	Ringnut wrench This tool is used to loosen and tighten the steering ringnut.	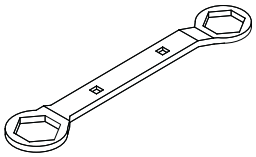

Tool No.	Tool name / Usage	Illustration
90890-01326	T-handle This tool is needed to loosen and tighten the front fork damper rod holding bolt.	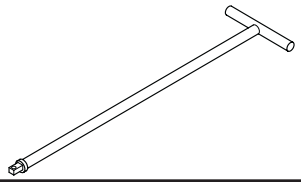
90890-01460	Front fork damper rod holder This tool is needed to hold the front fork damper rod when loosening and tightening the holding bolt.	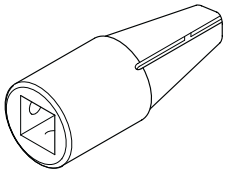
90890-11043	DU bush/oil seal guide This tool is used to install the DU bush and the fork oil seal.	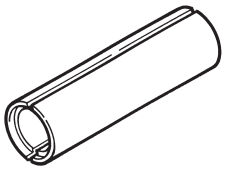

SPEC 2

CHAPTER 2.
SPECIFICATIONS

GENERAL SPECIFICATIONS 2-1

MAINTENANCE SPECIFICATIONS 2-4
ENGINE 2-4
CHASSIS 2-12
ELECTRICAL 2-17

GENERAL TORQUE SPECIFICATIONS 2-19

CONVERSION TABLE 2-19

LUBRICATION POINTS AND LUBRICANT TYPES 2-20
ENGINE 2-20
CHASSIS 2-21

LUBRICATION LAYOUT 2-22

CABLE ROUTING 2-26

SPECIFICATIONS

GENERAL SPECIFICATIONS

Item	Standard	Limit
Model	TT600RE: 5CH5	
Dimensions		
Overall length	2,220 mm	•••
Overall width	865 mm	•••
Overall height	1,195 mm	•••
Seat height	890 mm	•••
Wheelbase	1,480 mm	•••
Ground clearance	280 mm	•••
Minimum turning radius	3,300 mm (right) 3,100 mm (left)	•••
Basic weight (with oil and full fuel tank)	164.5 kg	•••
Engine		
Engine type	Air cooled 4-stroke, SOHC	
Cylinder arrangement	Forward inclined single cylinder	
Displacement	595 cm^3	•••
Bore x stroke	95.0 x 84.0 mm	•••
Compression ratio	8.5 : 1	•••
Starting system	Electric starter	
Lubrication system	Dry sump with separate oil tank	
Engine oil		
Type 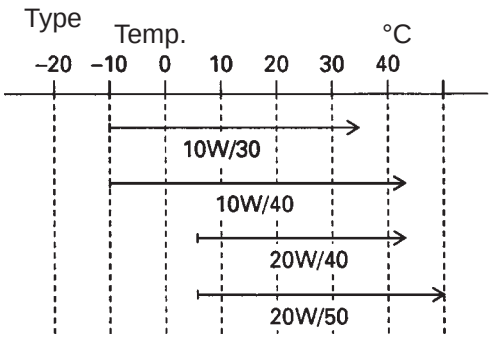 	SAE20W40SE or SAE10W30SE	•••
Recommended engine oil classification	API Service SE, SF, SG or higher	•••
Quantity:		
Without oil filter cartridge replacement	2.4 L	•••
With oil filter cartridge replacement	2.5 L	•••
Total amount (dry engine)	3.0 L	•••
Air filter	Wet type element	
Fuel		
Type	Regular unleaded gasoline	
Fuel tank capacity	10 L	•••
Fuel reserve amount	3.0 L	•••
Carburetor		
Manufacturer	TEIKEI	
Model x quantity	Y30PV-2ATK x 1	

Item	Standard	Limit
Spark plug		
Manufacturer/model	NGK/DPR8EA-9 or NGK/DPR9EA-9	
Gap	0.8–0.9 mm	•••
Clutch type	Wet. Multiple-disc	
Transmission		
Primary reduction system	Spur gear	
Primary reduction ratio	71/34 (2.088)	
Secondary reduction system	Chain drive	
Secondary reduction ratio	47/15 (3.133)	
Number of drive chain sprocket teeth (front/rear)	15/47	
Transmission type	Constant mesh 5-speed	
Operation	Left foot	
Gear ratio 1st	2.583	
2nd	1.588	
3rd	1.200	
4th	0.955	
5th	0.792	
Chassis		
Frame type	Open cradle backbone frame/detachable rear frame	
Caster angle	27°	•••
Trail	117 mm	•••
Tires		
Front:		
Type	With tube	
Size	90/90-21-(54R) / 90/90-21-(54S)	
Manufacturer/model	Pirelli / MT70 - Michelin / T63	
Rear:		
Type	With tube	
Size	130/80-18-(66R) / 130/80-18-(66S)	
Manufacturer/model	Pirelli / MT70 - Michelin / T63	
Maximum load*	180 kg	•••
Tire air pressure (measured on cold tires):		
Up to 90 kg* Front	200 kPa; 2.00 kgf/cm²; 2.00 bar	•••
Rear	220 kPa; 2.20 kgf/cm²; 2.20 bar	•••
90 kg–maximum* Front	210 kPa; 2.10 kgf/cm²; 2.10 bar	•••
Rear	240 kPa; 2.40 kgf/cm²; 2.40 bar	•••
Off-road riding Front	150 kPa; 1.50 kgf/cm²; 1.50 bar	•••
Rear	160 kPa; 1.60 kgf/cm²; 1.60 bar	•••
High-speed riding Front	210 kPa; 2.10 kgf/cm²; 2.10 bar	•••
Rear	240 kPa; 2.40 kgf/cm²; 2.40 bar	•••
* Total weight of rider, passenger, cargo and accessories		
Wheels		
Front:		
Type	Spoke wheel	
Size	21” x 1.85	
Rear:		
Type	Spoke wheel	
Size	18” x MT 2.50	

Item	Standard	Limit
Brakes		
Front:		
Type	Single Ø 267 mm disk brake, 2 x 28 mm	
Operation	Right hand	
Fluid	DOT 4	
Rear:		
Type	Single Ø 220 mm disk brake, 1 x 34 mm caliper	
Operation	Right foot	
Fluid	DOT 4	
Suspension		
Front	Telescopic fork Outside tube dia. 46 mm	
Rear	Deltabox Swingarm with adjustable shock absorber	
Spring/shock absorber		
Front	Coil spring / oil damper	
Rear	Coil spring / gas-oil damper, spring preload adjustable	
Wheel travel		
Front	230 mm	•••
Rear	230 mm	•••
Electrical system		
Ignition system	Transistorized coil ignition (digital)	
Charging system:		
Type	A.C. magneto	
Standard output	14V, 13.5A at 5.000 r/min	•••
Battery:		
Model	GT9B-4	
Voltage, capacity	12V, 8Ah	•••
Headlight type	Quartz bulb (halogen)	
Bulb voltage, wattage x quantity		
Headlight	12V 60W / 55W x 1	•••
Tail/brake light	12V 5W / 21W x 1	•••
Turn signal light	12V 10W x 4	•••
Auxiliary light	12V 5W x 1	•••
Meter lighting	12V 3W x 1	•••
Turn signal indicator light	12V 1.2W x 1	•••
Neutral indicator light	12V 1.2W x 1	•••
Auxiliary indicator light	12V 1.2W x 1	•••
High beam indicator light	12V 1.2W x 1	•••
Fuse	20A	•••

MAINTENANCE SPECIFICATIONS

ENGINE

Item	Standard	Limit
Cylinder head		
Max. warpage ✱	•••	0.03 mm
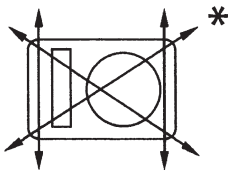		
Cylinder		
Bore	94.970 - 95.020 mm	95.10 mm
Measuring point ✱	50 mm	•••
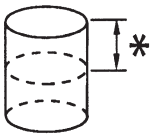		
Camshaft		
Drive system	Chain drive (left)	
Camshaft cap inside diameter	23.000 - 23.021 mm	•••
Camshaft journal diameter	22.967 - 22.980 mm	•••
Camshaft-journal-to-camshaft-cap clearance	0.020 - 0.054 mm	•••
Camshaft lobe dimensions:		
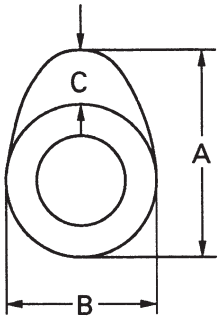		
Intake-measurement A	36.470 - 36.570 mm	•••
Intake-measurement B	30.060 - 30.160 mm	•••
Intake-measurement C	6.41 mm	•••
Exhaust-measurement A	36.620 - 36.720 mm	•••
Exhaust-measurement B	30.110 - 30.210 mm	•••
Exhaust-measurement C	6.51 mm	•••
Max. camshaft runout	•••	0.030 mm
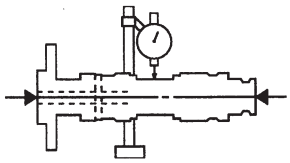		

Item		Standard	Limit
Timing chain			
Model/number of links		75-010/126	
Tensioning system		Automatic	
Rocker arm/rocker arm shaft			
Arm inside diameter		12.000 - 12.018 mm	•••
Shaft outside diameter		11.976 - 11.991 mm	•••
Arm-to-shaft clearance		0.009 - 0.042 mm	•••
Valve, valve seat, valve guide			
Valve clearance (cold)	intake	0.05 - 0.10 mm	•••
	exhaust	0.12 - 0.17 mm	•••

Valve dimensions:			
Valve head diameter A	intake	36.90 - 37.10 mm	•••
	exhaust	31.90 - 32.10 mm	•••
Valve face width B	intake	2.260 mm	•••
	exhaust	2.260 mm	•••
Valve seat width C	intake	1.00 - 1.20 mm	1.80 mm
	exhaust	1.00 - 1.20 mm	1.80 mm
Valve margin thickness D	intake	1.00 - 1.40 mm	0.80 mm
	exhaust	0.80 - 1.20 mm	0.65 mm
Valve stem diameter	intake	6.975 - 6.990 mm	6.995 mm
	exhaust	6.955 - 6.970 mm	6.925 mm
Valve guide inside diameter	intake	7.000 - 7.012 mm	7.042 mm
	exhaust	7.000 - 7.012 mm	7.042 mm
Valve stem to valve guide clearance	intake	0.010 - 0.037 mm	0.08 mm
	exhaust	0.030 - 0.057 mm	0.10 mm
Valve stem runout		•••	0.010 mm

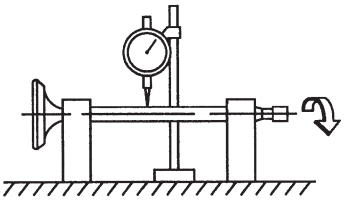

Valve seat width	intake	1.10 mm	1.80 mm
	exhaust	1.10 mm	1.80 mm

Item		Standard	Limit
Valve spring			
Inner spring:			
Free length	intake	40.10 mm	38.10 mm
	exhaust	40.10 mm	38.10 mm
Installed length (valve closed)	intake	22.70 mm	•••
	exhaust	22.70 mm	•••
Compressed spring force (installed)	intake	164.80 - 190.20 N	•••
		16.80 - 19.39 kg	•••
	exhaust	164.80 - 190.20 N	•••
		16.80 - 19.39 kg	•••
Spring tilt intake	intake	•••	2.5 °/1.7 mm
	exhaust	•••	2.5 °/1.7 mm
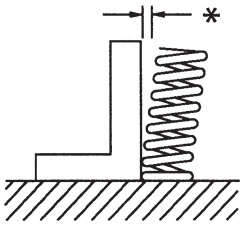			
Winding direction (top view)	intake	Clockwise	
	exhaust	Clockwise	
Outer spring:			
Free length intake	intake	43.80 mm	38.10 mm
	exhaust	43.80 mm	38.10 mm
Installed length (valve closed)	intake	34.20 mm	•••
	exhaust	34.20 mm	•••
Compressed spring force (installed)	intake	71.60 - 87.30 N	•••
		7.3 - 8,9 kg	•••
	exhaust	149.10 - 182.40 N	•••
		15.2 - 18.6 kg	•••
Spring tilt	intake	•••	2.5 °/1.7 mm
	exhaust	•••	2.5 °/1.9 mm
Winding direction (top view)	intake	Counterclockwise	
	exhaust	Counterclockwise	
Piston			
Piston-to-cylinder clearance		0.045 - 0.065 mm	0.15 mm
Diameter D		94.915 - 94.965 mm	•••
Height H		5.0 mm	•••
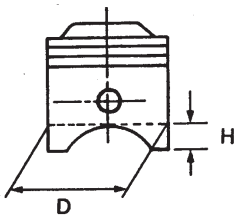			
Piston pin bore inside diameter		22.004 - 22.015 mm	•••
Offset		2.00 mm	•••
Offset direction		Intake side	
Piston pin outside diameter		21.991 - 22.000 mm	•••

Item	Standard	Limit
Piston ring		
Top ring:		
Ring type	Barrel	
Dimensions (B x T)	1.20 x 3.80 mm	•••
End gap (installed)	0.30 - 0.45 mm	0.70 mm
Ring side clearance	0.040 - 0.080 mm	0.130 mm
2nd ring:		
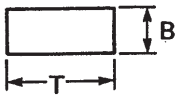		
Ring type	Plain	
Dimensions (B x T)	1.20 x 3.80 mm	•••
End gap (installed)	0.30 - 0.45 mm	0.80 mm
Ring side clearance	0.030 - 0.070 mm	0.130 mm
Oil ring:		
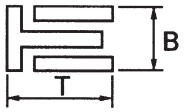		
Dimensions (B x T)	2.50 x 3.40 mm	•••
End gap (installed)	0.20 - 0.70 mm	•••
Ring side clearance	0.020 - 0.060 mm	•••
Crankshaft		
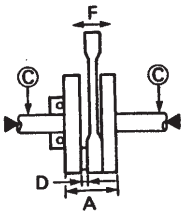		
Width A	74.95 - 75.00 mm	•••
Max. runout C	•••	0.030 mm
Big end side clearance D	0.350 - 0.650 mm	•••
Big end radial clearance	0.010 - 0.025 mm	•••
Small end free play F	0.80 mm	•••

Item	Standard	Limit
Ballancer		
Ballancer drive method	Gear	
Clutch		
Clutch release method	Inner push, cam push	
Friction plate thickness	2.72 - 2.88 mm	•••
Wear limit	•••	2.60 mm
Plate quantity	6 pcs	
Friction plate thickness	2.94 - 3.06 mm	•••
Wear limit	•••	2.8 mm
Plate quantity	2 pcs	
Clutch plate thickness	1.20 mm	•••
Plate quantity	7 pcs	
Max. warpage	•••	0.20 mm
Clutch spring free length	42.8 mm	•••
Plate quantity	5 pcs	
Clutch housing thrust clearance	0.070 - 0.071 mm	•••
Transmission		
Max. main axle runout	•••	0.08 mm
Max. drive axle runout	•••	0.08 mm
Shift mechanism type	Cam drum and guide bar	
Carburetor		
ID mark	5CH5 10	
Main jet	#1:#150 #2:#145	
Main air jet	#1:1.0 #2:0.9	
Jet needle	#1:5C5A-3/5 #2:5Y18-3/5	
Needle jet	2.600	
Cutaway	4.00	
Pilot air jet 1	# 0.8 mm	
Pilot jet	# 50	
Bypass 1	# 1.0	
Pilot screw turns out	2-3/4 +/- 1/2	
Valve seat size	2.5	
Starter jet 1	# 74	
Float height	6.0 - 8.0 mm	•••
Engine idle speed	1,150-1,450 r/min	•••
CO%	1.5 - 3	•••
Intake vacuum	30.6-33.36 kPa - 230-250 mm Hg	•••
Lubrication system	Dry sump	
Oil filter type	Paper type	
Oil pump:		
Oil pump type	Trochoid type	
Inner rotor to outer rotor tip clearance	0.12 mm	0.20 mm
Outer rotor to pump housing clearance	0.030 - 0.080 mm	0.150 mm
Bypass valve opening pressure	80.0 - 120.0 kPa (0.8 - 1.2 kgf/cm^2)	•••
Relief valve operating pressure	80.0 - 120.0 kPa (0.8 - 1.2 kgf/cm^2)	•••
Oil pressure (hot)	13.0 kPa (0.13 kgf/cm^2)/1,300 r/min	•••
Pressure check location	Oil filter chamber	•••

ENGINE

Cylinder head tightening steps:

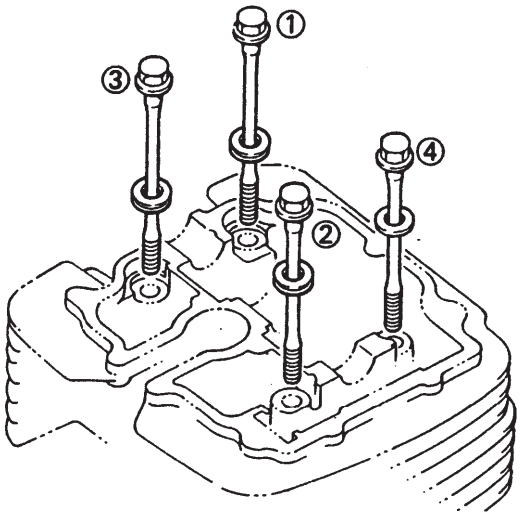

Crankcase tightening steps:

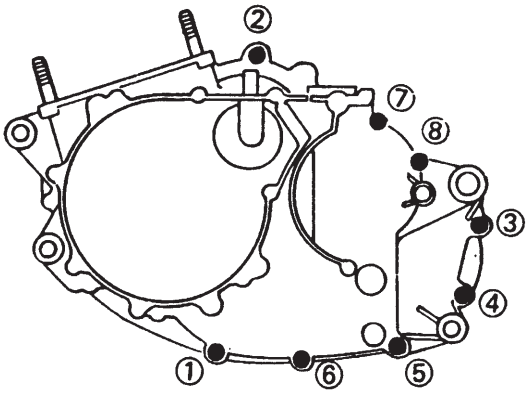

Left crankcase

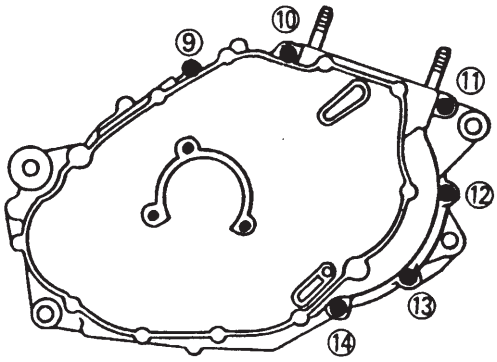

Right crankcase

Tightening torques

Part to be tightened	Part name	Thread size	Tightening torque		Remarks
			Nm	mkg	
Cylinder head	Washer based bol	M8 x 1.25	29	2.9	
Cylinder head	Stud bolt	M10 x 1.25	20	2.0	
Cylinder head	Hexagon socket head screw	M6 x 1.0	10	1.0	
Cylinder head	Stud bolt	M6 x 1.0	7	0.7	
Cylinder head: Cap (oil check)	Union bolt	M6 x 1.0	7	0.7	
Spark plug	–	M12 x 1.25	18	1.8	
Cylinder head cover	Hexagon socket head screw	M6 x 1.0	10	1.0	
Tappet cover (intake)	Hexagon socket head screw	M6 x 1.0	10	1.0	
Tappet cover (exhaust)	–	M32 x 1.5	12	1.2	
Cylinder	Crown nut	M8 x 1.25	22	2.2	
Cylinder	Nut	M10 x 1.25	42	4.2	
Cylinder	Hexagon socket head screw	M6 x 1.0	10	1.0	
Weight drive gear	Hexagon nut	M16 x 1.0	60	6.0	
Rotor (A.C. magneto)	Hexagon nut	M14 x 1.5	120	12.0	
Lock nut (valve adjusting screw)	Hexagon nut	M6 x 1.0	14	1.4	
Cam chain sprocket	Washer based bolt	M7 x 1.0	20	2.0	
Cam chain stopper guide	Hexagon socket head screw	M6 x 1.0	10	1.0	
Cam chain stopper guide	Washer based screw	M16 x 1.0	20	2.0	
Rocker shaft	Hexagon socket head screw	M6 x 1.0	10	1.0	
Oil pump	Hexagon socket head screw	M6 x 1.0	10	1.0	
Oil delivery/retrieval pipe	Pan screw	M6 x 1.0	7	0.7	
Oil draining pipe	Washer based screw	M14 x 1.5	30	3.0	
Oil filter cover	Hexagon socket head screw	M6 x 1.0	10	1.0	
Bleed screw (oil filter cover)	Hexagon screw	M5 x 0.8	5	0.5	
Push lever (clutch)	Pan screw	M8 x 1.0	12	1.2	
Push rod (clutch)	Hexagon nut	M6 x 1.0	8	0.8	
Sprocket	Hexagon nut	M18 x 1.0	115	11.5	
Lock washer (oil seal)	Hexagon screw	M6 x 1.0	10	1.0	
Stop lever	Bolt	M6 x 1.0	10	1.0	
Shift cam	Hexagon screw	M6 x 1.0	10	1.0	
Stator	Pan head (+) screw	M5 x 0.8	5	0.5	

Part to be tightened	Part name	Thread size	Tightening torque		Remarks
			Nm	mkg	
Stator (pick-up coil)	Hexagon socket head screw	M6 x 1.0	7	0.7	LT
Engine oil pipe 1	Hexagon socket head screw	M6 x 1.0	10	1.0	
Engine oil pipe 2	Union screw	M12 x 1.25	35	3.5	
Oil delivery pipe	Union bolt	M8 x 1.25	18	1.8	
Carburetor joints	Hexagon socket head screw	M6 x 1.0	10	1.0	
Air filter case (frame)	Hexagon screw	M6 x 1.0	10	1.0	
Air filter case (frame)	Washer based screw	M6 x 1.0	10	1.0	
Exhaust pipe	Washer based nut	M6 x 1.0	10	1.0	
Exhaust pipe protector	Pan head (+) screw	M6 x 1.0	7	0.7	LT
Muffler	Hexagon socket head screw	M8 x 1.25	23	2.3	M
Muffler (band)	Nut, nylon	M8 x 1.25	23	2.3	
Muffler	Washer based screw	M8 x 1.25	23	2.3	
Crankcase	Hexagon socket head screw	M6 x 1.0	10	1.0	
Crankcase	Stud bolt	M10 x 1.25	20	2.0	
Crankcase cover (right)	Hexagon socket head screw	M6 x 1.0	10	1.0	
Crankcase cover (left)	Hexagon socket head screw	M6 x 1.0	10	1.0	
Sprocket cover	Hexagon socket head screw	M6 x 1.0	10	1.0	LT
Stop washer (bearing)	Flat headscrew	M6 x 1.0	7	0.7	LT
Pressure plate	Washer based screw	M6 x 1.0	8	0.8	
Clutch housing	Hexagon nut	M20 x 1.0	90	9.0	
Primary drive gear	Hexagon nut	M20 x 1.0	120	12.0	

CHASSIS

Item	Standard	Limit
Steering		
Steering bearing type	Taper roller bearing	
Lock to lock angle (left)	45°	•••
Lock to lock angle (right)	45°	•••
Front suspension		
Front fork travel	277 - 283 mm	•••
Fork spring free length	530 mm	•••
Spring rate (K1)	7.0 N/mm (0.71 kgf/mm)	•••
Spring stroke (K1)	330 mm	•••
Spring rate (K2)	11.2 N/mm (1.14 kgf/mm)	•••
Optional spring available	No	
Recommended oil	Liqui Moly Racing suspension oil SAE 7,5	
Quantity	650 cc	•••
Level	180 mm	•••
< min - max >	170-190 mm (from upper edge of inner tube, fully compressed without spring)	•••
Rear suspension		
Rear shock absorber assembly travel	83 mm	
Spring free length	224 mm	•••
Installed length	211 mm	± 1.5 mm
Spring rate (K)	80 N/mm (8.1 kgf/mm)	•••
Optional spring available	No	
Swingarm		
Free play limit (at the end of the swingarm)-radial	•••	1.0 mm
Free play limit (at the end of the swingarm)-axial	0.4 - 0.7 mm	•••
Front wheel		
Wheel type	Spoke wheel	
Rim size	21 x 1.85	
Rim material	Aluminium	
Max. radial wheel runout	1.0 mm	•••
Max. lateral wheel runout	0.5 mm	•••
Rear wheel		
Wheel type	Spoke wheel	
Rim size	18 x MT2.50	
Rim material	Aluminium	
Max. radial wheel runout	1.0 mm	•••
Max. lateral wheel runout	0.5 mm	•••

Item	Standard	Limit
Drive chain		
Type/manufacturer	520 135ORSB / Regina Chain	
Link quantity	114	
Drive chain slack	30.0 - 40.0 mm	•••
Front disc brake		
Disc outside diameter x thickness	267 x 4 mm	•••
Max. deflection	•••	0.15 mm
Brake pad lining thickness-inner	7.5 mm	* 3.7 mm
Brake pad lining thickness-outer	7.5 mm	* 3.7 mm
Master cylinder inside diameter	13 mm	
Caliper cylinder inside diameter	28 mm x 2	
Recommended fluid	DOT 4	
Rear disc brake		
Disc outside diameter x thickness	220.0 x 5.0 mm	•••
Max. deflection	•••	0.15 mm
Brake pad lining thickness-inner	9.0 mm	* 4.5 mm
Brake pad lining thickness-outer	9.0 mm	* 4.5 mm
Master cylinder inside diameter	12.7 mm	
Caliper cylinder inside diameter	34 mm	
Recommended fluid	DOT 4	
Front brake lever	Adjustable	
Brake pedal lever		
Brake pedal position	10 mm (below the footrest plane)	•••
Clutch lever		
Clutch lever free play (lever end)	10.0 - 15.0 mm	•••
Throttle grip		
Throttle cable free play	3.0 - 5.0 mm	•••

Tightening torques

Part to be tightened	Thread size	Tightening torque		Remarks
		N·m	m·kg	
Engine mounting and rear frame:				
Engine front/Stay engine	M10 x 1.25	64	6.4	
Stay engine (engine front)/Frame	M10 x 1.25	64	6.4	
Engine rear under/Frame	M10 x 1.25	68	6.8	
Engine top/Stay engine	M10 x 1.25	64	6.4	
Engine protector/Frame	M6 x 1.0	7	0.7	
Chain tensioner top/Frame	M8 x 1.25	23	2.3	
Chain tensioner under/Frame	M8 x 1.25	23	2.3	
Frame/Rear frame (upper)	M8 x 1.25	23	2.3	
Frame/Rear frame (under)	M8 x 1.25	23	2.3	
Rear frame/Air filter assy	M6 x 1.0	5	0.5	
Front fork and steering:				
Handle crown/Inner tube	M8 x 1.25	28	2.8	
Handle crown/Steering shaft	M28 x 1.5	4	0.4	See “NOTE”
Steering shaft/Ring nut	M36 x 1.5	115	11.5	
Holder handle upper/Crown handle	M8 x 1.25	20	2.0	
Holder handle under/Crown handle	M10 x 1.5	40	4.0	
Front fork under bracket/Inner tube	M8 x 1.25	23	2.3	
Front master cylinder/Cap	M4 x 0.7	1.5	0.15	
Front master cylinder/Handle	M6 x 1.0	9	0.9	
Union bolt tightening	M10 x 1.0	20	2.0	
Front fender/Front fork	M6 x 1.0	7	0.7	
Stay headlight/Handle crown	M6 x 1.0	10	1.0	
Stay headlight/Bracket meter	M6 x 1.0	6	0.6	
Headlight/Stay headlight	M6 x 1.0	10	1.0	
Rear arm and cushion:				
Pivot shaft/Frame	M14 x 1.5	90	9.0	
Arm relay/Frame	M10 x 1.25	60	6.0	
Arm relay/Rod connecting	M10 x 1.25	52	5.2	
Arm relay/Shock absorber	M10 x 1.25	59	5.9	
Rod connecting/Rear arm	M12 x 1.25	66	6.6	
Shock absorber upper/Frame	M12 x 1.25	66	6.6	
Seal guard/Rear arm	M6 x 1.0	4	0.4	LT
Support chain/Rear arm	M6 x 1.0	9	0.9	
Chain case/Rear arm	M6 x 1.0	9	0.9	
Front wheel:				
Front wheel shaft/Front fork	M16 x 1.5	59	5.9	
Axle holder//Front fork	M6 x 1.0	9	0.9	
Rear wheel:				
Rear wheel shaft/Nut	M18 x 1.5	115	11.5	
Clutch hub/Sprocket	M10 x 1.25	48	4.8	

Part to be tightened	Thread size	Tightening torque		Remarks
		N·m	m·kg	
Front brake:				
Front hub/Disc brake	M6 x 1.0	12	1.2	LT
Front caliper/Front fork	M8 x 1.25	25	2.5	
Front caliper/Bleeder tightening	M10 x 1.0	14	1.4	
Union bolt tightening (front)	M10 x 1.0	20	2.0	
Rear brake:				
Rear hub/Disc brake	M6 x 1.0	12	1.2	LT
Rear master cylinder/Frame	M6 x 1.0	10	1.0	
Rear stop switch/Rear master cylinder	M10 x 1.0	20	2.0	
Rear caliper/Bleeder tightening	M10 x 1.0	14	1.4	
Protector rear caliper/Rear caliper	M6 x 1.0	10	1.0	
Union bolt tightening (rear)	M10 x 1.0	20	2.0	
Rear brake tank reserve/Air cleaner assy	M6 x 1.0	5	0.5	
Brake pedal/Frame	M10 x 1.25	48	4.8	
Sidestand/Footrest:				
Sidestand mounting bolt/Frame	M12 x 1.25	40	4.0	
Sidestand mounting bolt/Nut	M12 x 1.25	40	4.0	
Sidestand switch/Frame	M5 x 0.8	8	0.8	
Rear footrest/Rear frame	M8 x 1.25	30	3.0	
Bracket 1 (main footrest)/Frame	M10 x 1.25	48	4.8	
Bracket 2 (main footrest)/Frame	M10 x 1.25	48	4.8	
Footrest cover/Footrest	M6 x 1.0	10	1.0	
Seat, fuel tank and oil tank:				
Seat/Frame	M6 x 1.0	10	1.0	
Bolt (guide seat)/Fuel tank	M6 x 1.0	5	0.5	
Fuel tank/Rear frame	M6 x 1.0	12	1.2	
Damper fuel tank (front)/Frame	M8 x 1.25	15	1.5	
Fuel tank/Fuel cock	M6 x 1.0	7	0.7	
Oil tank/Sub-oil tank	M6 x 1.0	7	0.7	
Union bolt (oil hose 2)/Oil tank assy/Engine	M12 x 1.25	35	3.5	
Oil hose 1/Oil tank/Engine	M6 x 1.0	10	1.0	
Oil tank/Rear frame	M12 x 1.5	20	2.0	
Frame, rear fender compl. and lights:				
Rear fender compl. (under)/Rear frame	M6 x 1.0	2	0.2	
Rear fender compl. (upper)/Rear frame	M6 x 1.0	7	0.7	
Bracket, license/Rear frame	M6 x 1.0	10	1.0	
Bracket, license/Rear flasher	M6 x 1.0	10	1.0	
Horn/Frame	M6 x 1.0	13	1.3	
Regulator/Frame	M8 x 1.25	7	0.7	
Igniton coil/Frame	M5 x 0.8	13	1.3	
Battery box/Rear frame	M6 x 1.0	7	0.7	
Igniter cover/Battery box	M4	1	0.1	
Main switch/Frame	M24 x 1.0	1	0.1	
Tail light (lense)/Rear fender compl.	M3.5	1	0.1	
Starter switch/Red wire	M6 x 1.0	7	0.7	

Part to be tightened	Thread size	Tightening torque		Remarks
		N·m	m·kg	
Starting motor cord/Starting motor	M6 x 1.0	11	1.1	
Wire minus lead (-)/Starting motor	M6 x 1.0	10	1.0	
Front flasher lights/Stay, headlight	M6 x 1.0	1.5	0.15	
Clutch wire/Engine	M6 x 1.0	7	0.7	
Assist grip (Standing handle)/Rear frame	M8 x 1.25	23	2.3	
Speedometer	M5 x 0.8	4	0.4	
Air filter case 1/Air filter case 2 (L = 13 mm)	M3.9	0.5	0.05	
Air filter case 1/Air filter case 2 (L = 19 mm)	M3.9	1	0.1	
Hose clamp/Joint, carburator	M4 x 0.7	0.6	0.06	
Hose clamp/Air cleaner/Carburator	M5 x 0.8	0.8	0.08	
Battery (+)/(-)	M6 x 1.0	2.5	0.25	

NOTE:

1. First tighten the ring nut approximately 38 Nm (3.8 mkg) by using the torque wrench, then loosen the ring nut one turn.
2. Final tighten the ring nut at the torque of 4 Nm (0.4 mkg).

ELECTRICAL

Item	Standard	Limit
Ignition system		
Ignition timing (B.T.D.C.)	12° / 1,300 r/min	•••
Advanced timing (B.T.D.C.)	31° / 7,500 r/min	•••
Advancer type	Electrical type	
Transistorized coil ignition		
Pickup coil resistance	230 Ω ± 20% L/Y-G/W	•••
T.C.I. unit model/manufacturer	TNDF09 / NIPPON DENSO	
Ignition coil		
Model/manufacturer	JO300 / NIPPON DENSO	
Primary coil resistance	4 Ω ± 15%	•••
Secondary coil resistance	13 kΩ ± 20%	•••
Spark plug cap		
Material	Resin	
Resistance	10 kΩ	•••
Charging system		
Type	A.C. magneto	
Model/manufacturer	TLMZ48 / NIPPON DENSO	
Standard output	14.0 V 13.5 A 5,000 r/min	•••
Stator coil resistance	0.65 Ω ± 20% W-W	•••
Rectifier/regulator		
Regulator type	Semi conductor-short circuit	
Model/manufacturer	SH629A-12/SHINDENGEN	
No load regulated voltage	14.5 ± 0.4 V	•••
Rectifier capacity	25 A	•••
Withstand voltage	240 V	•••
Battery		
Specific gravity	1.320	•••
Electric starting system		
System type	Constant mesh	
Starter motor:		
Model/manufacturer	SM-13/MITSUBA	
Power output	0.80 kW	•••
Armature coil resistance	0.03 - 0.04 Ω	•••
Brush overall length	10.0 mm	5 mm
Brush spring force	8.82 N (899 gf)	•••
Commutator diameter	28.0 mm	27 mm
Mica undercut (depth)	0.70 mm	•••
Starter relay:		
Model/manufacturer	MS5F-721 / JIDECO	
Amperage	180 A	•••
Coil resistance	4,4 Ω ± 5%	•••

Item	Standard	Limit
Horn		
Horn type	Plane	
Quantity	1 pcs	
Manufacturer	LEONELLI	
Max. amperage	1.5 A	•••
Flasher relay		
Type	Semi-transistor	•••
Model/manufacturer	FB222M/NIPPONDENSO	•••
Self cancelling device	No	•••
Flasher frequency	75 - 95 cycle/min	•••
Wattage	10 W × 2 + 3.4 W	•••
Daylight switch relay		
Model/manufacturer	ACA12151-1-MATSUSHITA DENKOU	
Circuit breaker		
Type	Fuse	
Amperage for fuse	20 A	•••
Reserve	20 A	•••

GENERAL TORQUE SPECIFICATIONS

This chart specifies torque for standard fasteners with standard I.S.O. pitch threads. Torque specifications for special components or assemblies are provided for each chapter of this manual. To avoid warpage, tighten multi-fastener assemblies in a crisscross fashion, in progressive stages, until the specified torque is reached. Unless otherwise specified, torque specifications require clean, dry threads. Components should be at room temperature.

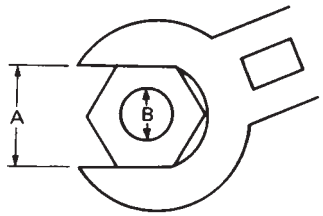

A: Distance between flats
B: Outside thread diameter

A (nut)	B (Bolt)	General torque specifications	
		N·m	m·kg
10 mm	6 mm	6	0.6
12 mm	8 mm	15	1.5
14 mm	10 mm	30	3.0
17 mm	12 mm	55	5.5
19 mm	14 mm	85	8.5
22 mm	16 mm	130	13.0

CONVERSION TABLE

All specification data in this manual are listed in SI and METRIC UNITS. Use this table to convert METRIC unit data to IMPERIAL unit data.

Ex.

METRIC		MULTIPLIER		IMP
** mm	×	0.03937	=	** in
2 mm	×	0.03937	=	0.08 in

CONVERSION TABLE

METRIC TO IMP			
	Known	Multiplier	Result
Torque	m·kg	7.233	ft·lb
	m·kg	86.794	in·lb
	cm·kg	0.0723	ft·lb
	cm·kg	0.8679	in·lb
Weight	kg	2.205	lb
	g	0.03527	oz
Distance	km/hr	0.6214	mph
	km	0.6214	mi
	m	3.281	ft
	m	1.094	yd
	cm	0.3937	in
	mm	0.03937	in
Volume/ Capacity	cc (cm^3)	0.03527	oz (IMP liq.)
	cc (cm^3)	0.06102	cu·in
	lt (liter)	0.8799	qt (IMP liq.)
	lt (liter)	0.2199	gal (IMP liq.)
Miscel-laneous	kg/mm	55.997	lb/in
	kg/cm^2	14.2234	psi (lb/in^2)
	Centigrade	9/5 (°C) + 32	Fahrenheit (°F)

LUBRICATION POINTS AND LUBRICANT TYPES

ENGINE

Lubrication points (part name)	Lubricant type
Oil seal edges (completely)	LS
Bearing retainer	E
Rod pins	E
Rod (big end)	E
Piston and piston rings	E
Hub (weight drive sprocket)	E
Piston pin	E
Valve stim and guide	M
Oil seal (valve stim end)	M
Rocker shaft and rocker arm	E
Cam and bearing (camshaft)	E
Rotor and rotor housing (oil pump)	E
Push rod (clutch)	LS
Primary driven gear and main shaft	E
Sliding gear (transmission)	M
Idle gear (transmission)	M
Shift forks and bar	E
Shift cam and bearing (gearshift cam)	E
Shift shaft	E
Rod housing coupled surfaces	Bonding agent (rapid seal adhesive)® Yamaha bond No. 1215®
Coupled surfaces (cylinder head and cylinder head cover)	Bonding agent (rapid seal adhesive)® Yamaha bond No. 1215®

CHASSIS

Lubrication points (part name)	Lubricant type
Gear unit (tachometer)	LS
Oil seal edges (completely)	LS
Wheel axle (front and rear wheels)	LS
Rear wheel hub and clutch	LS
Bearings brasses (rear arm) and bearing push cover	LS
Front footrest	LS
Pivot points (brake pedal and shift pedal)	LS
Bearings (steering head)	LS
Pivot points (brake lever and clutch lever)	LS
Clutch cable end	LS
Pivot points (sidestand)	LS
Grease nipples (rear arm-front axle)	LS

LUBRICATION LAYOUT

(1) Oil tank
(2) Oil pump
(3) Oil filter (oil tank)
(4) Oil strainer (engine)
(5) Oil vapour retrieval hose
(6) Oil blow-by retrieval hose

[A] DELIVERY
[B] RETRIEVAL

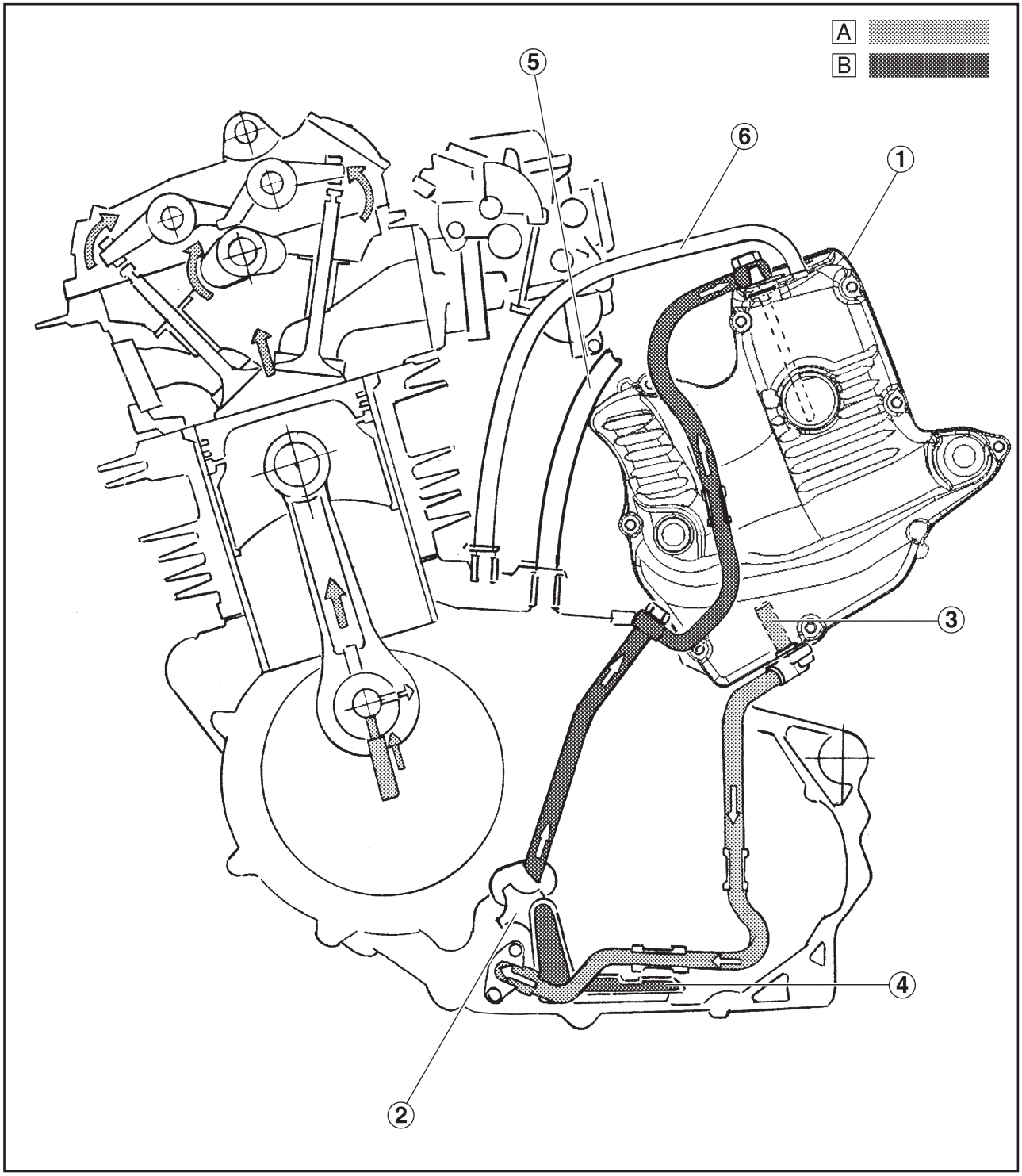

(1) Oil pump
(2) Oil filter
(3) Camshaft
(4) Oil delivery hose
(5) Main driving shaft
(6) Drive shaft

[A] DELIVERY
[B] RETRIEVAL

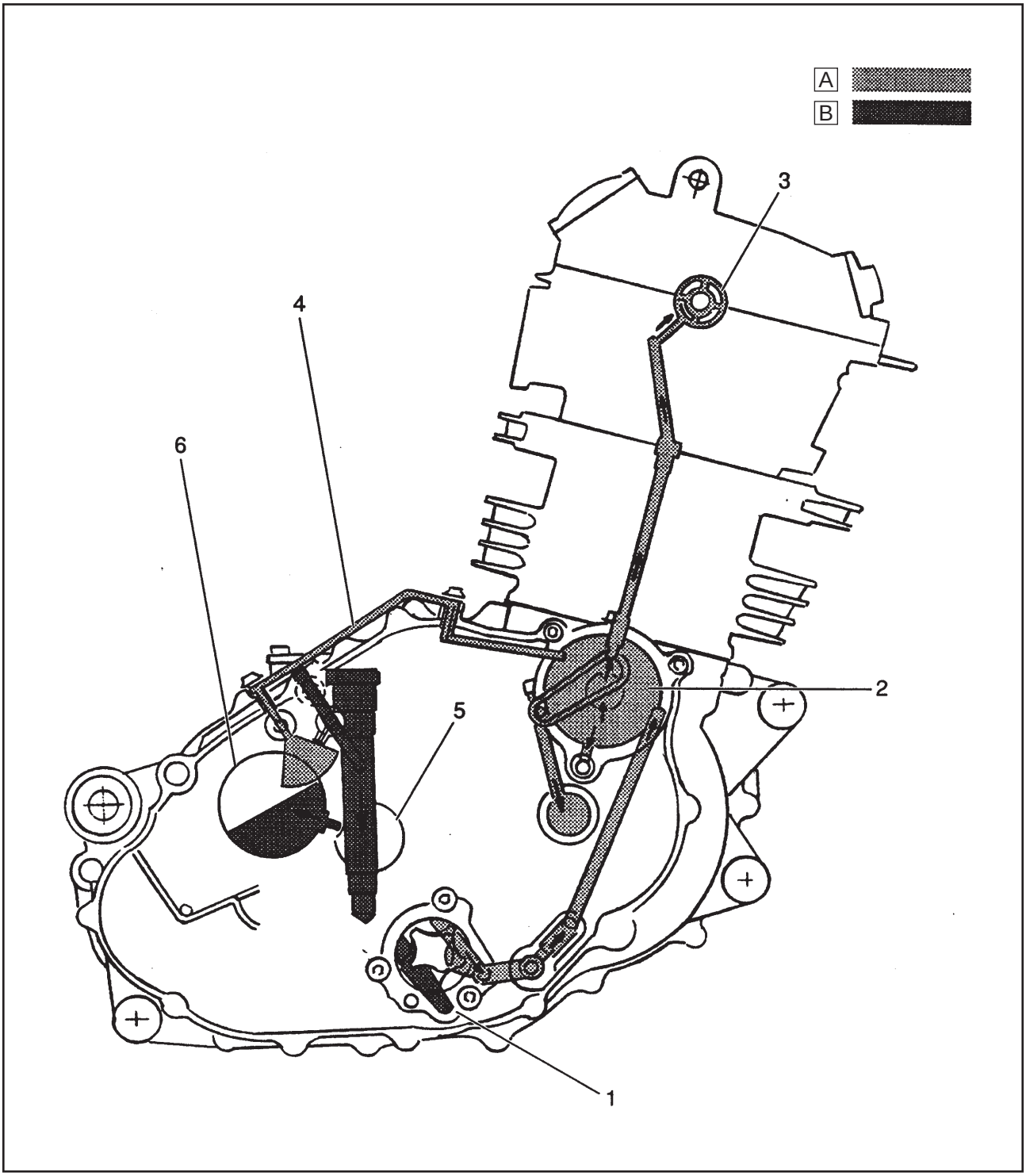

(1) Oil filter
(2) Camshaft
(3) Connecting rod pin
(4) Main driving shaft
(5) Secondary drive shaft
(6) Drain plug

[A] DELIVERY
[B] RETRIEVAL

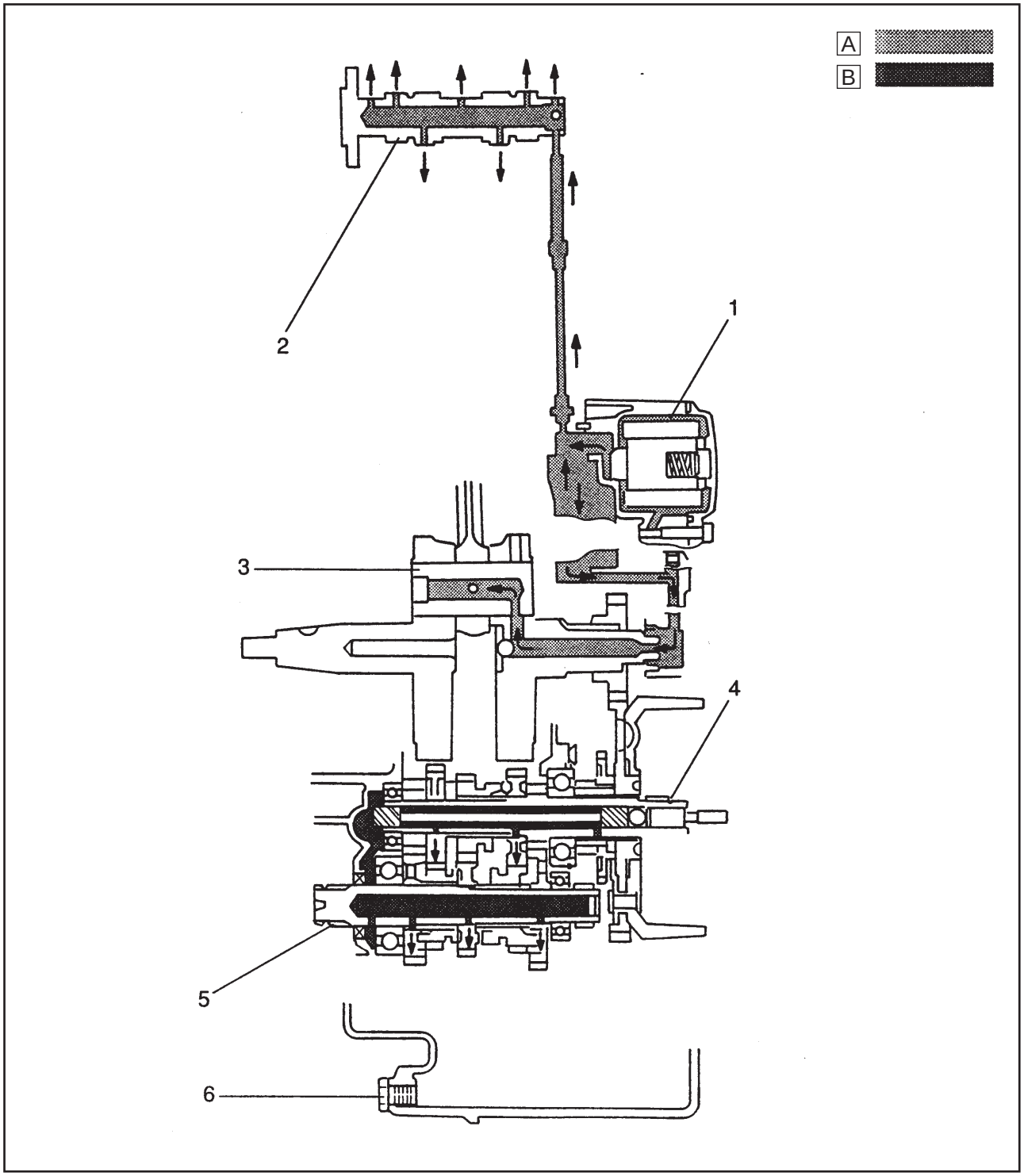

(1) Oil pump
(2) Oil filter
(3) Oil delivery hose
(4) Transmission
(5) Oil strainer

[A] DELIVERY
[B] RETRIEVAL

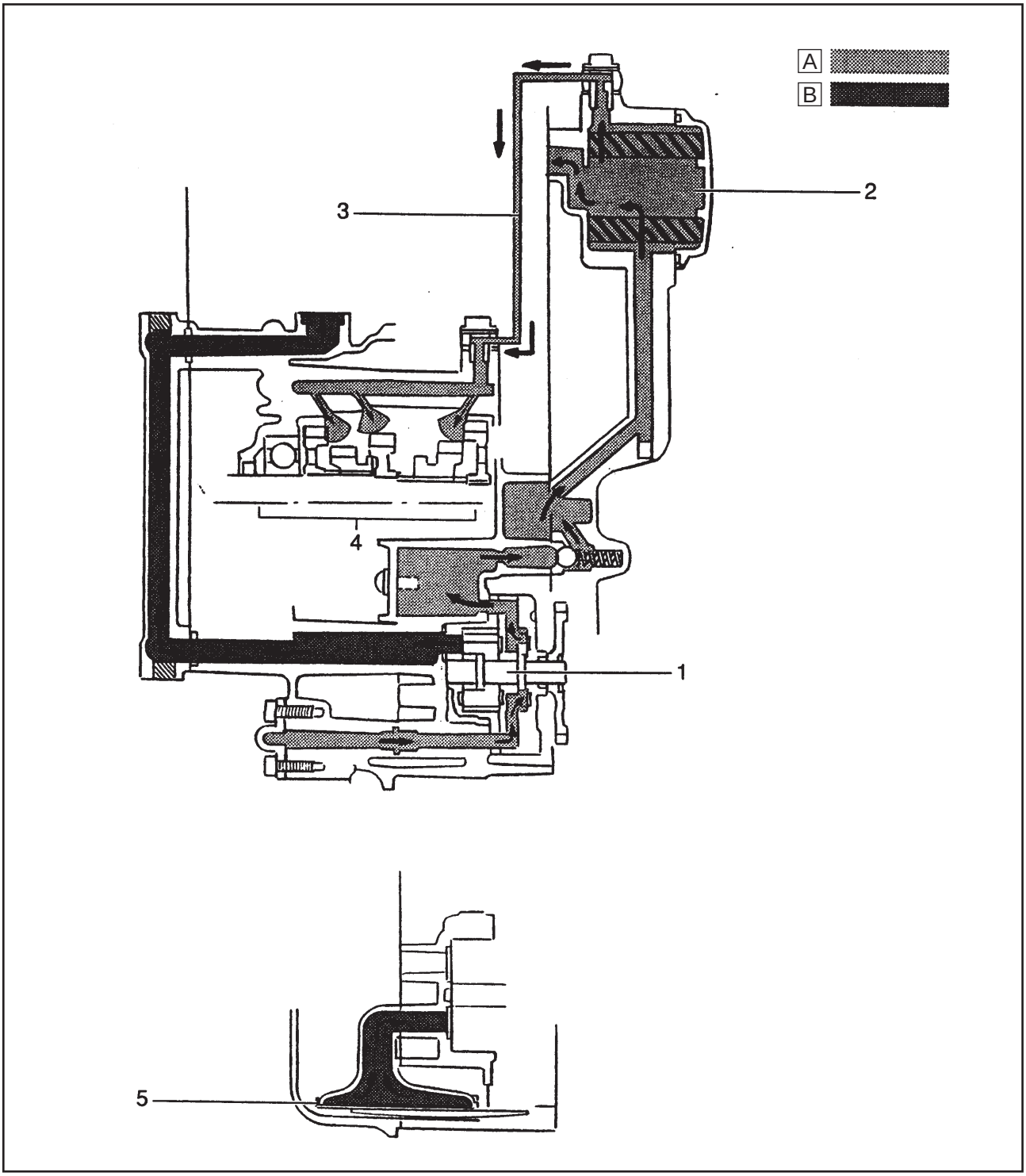

CABLE ROUTING

(1) Clutch cable
(2) Brake hose holder
(3) Brake hose
(4) Throttle cables
(5) Bands
(6) Lighting wire harness
(7) Brake and engine stop switch wire harness
(8) Tachometer/ odometer cable
(9) Complete wire harness
(10) Socket cover
(11) Engine stop switch connector
(12) Headlight wire harness connector
(13) Left turn light connector
(14) Right turn light connector
(15) Meter wire harness connector
(16) Main switch wire harness connector
(17) Clutch switch
(18) Headlight connector
(19) Side/taillight connector
(20) Clutch switch connector
(21) Brake switch connector
(22) Clip
[**A**] Lay the brake hose throught the holder on the handle crown.

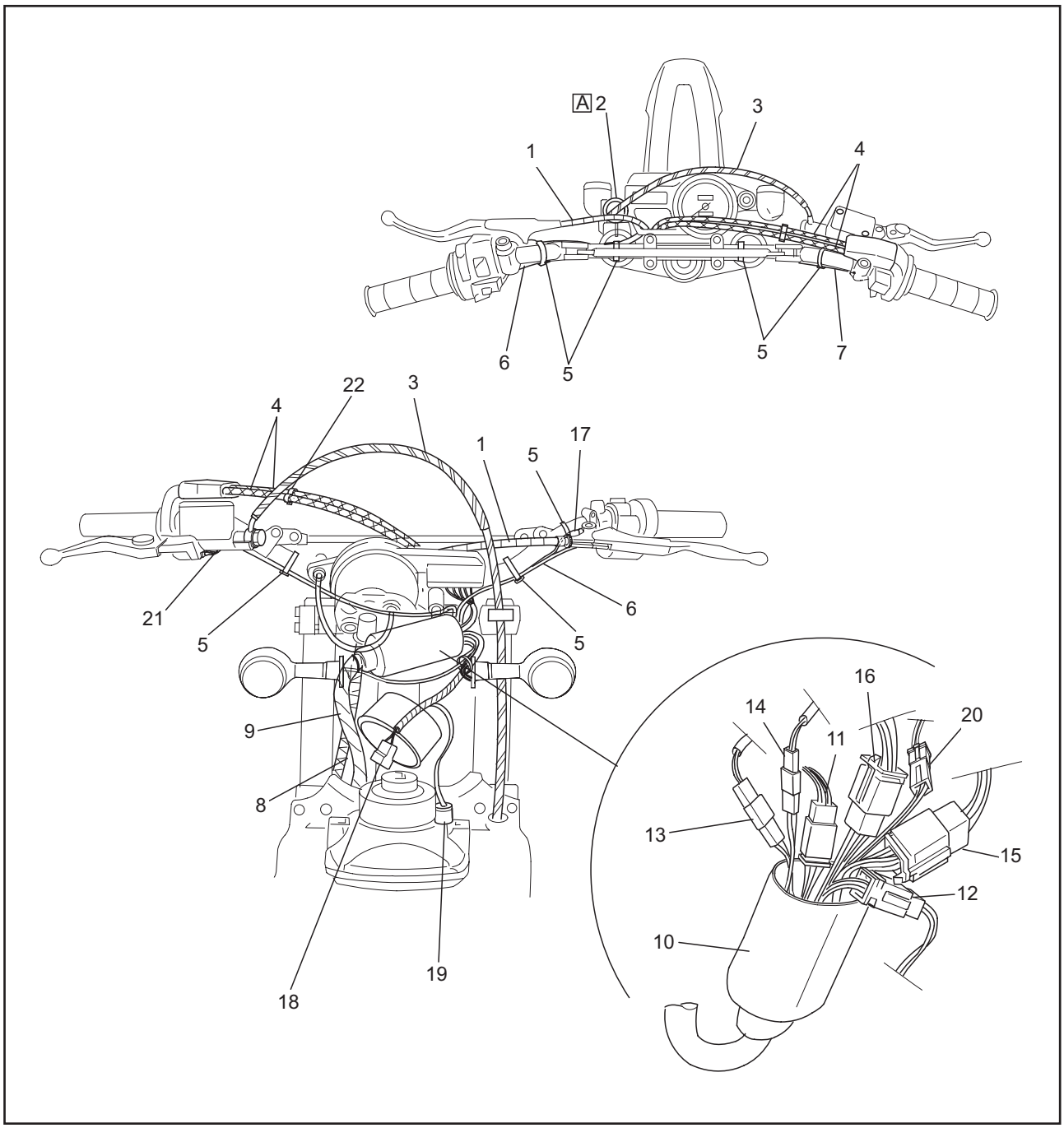

(1) Front brake hose
(2) Brake hose holder
(3) Left tube guard
(4) Plastic plate
(5) Throttle cables
(6) Tachometer/ odometer cable
(7) Clutch cable
(8) Clutch cable holder
(9) Throttle cables holder
(10) Wire harness band
(11) Fuel pipe from fuel cock
(12) Flasher relay
(13) Main relay
(14) Sidestand switch
(15) Diodes (n. 3)
(16) A.C. generator wire harness (engine)
(17) Engine oil breather pipe (to engine oil tank)
(18) Main switch
(19) Oil hose (oil tank to engine)
(20) Oil hose (engine to oil tank)
(21) C.D.I. unit
(22) Starting motor plus cable
(23) Starting motor minus cable
(24) Battery
(25) Starting relay
(26) Fuse (reserve)
(27) Fuse (main)
(28) Wire extension
(29) Battery plus cable

[**A**] Lay the brake hose behind the left tube guard and fasten it down by means of the plate 4.
[**B**] Attach throttle cables 5.
[**C**] Fasten the fuel pipe 11 to the tank.
[**D**] Fit the 3 diodes inside the chassis, against the coil clip.

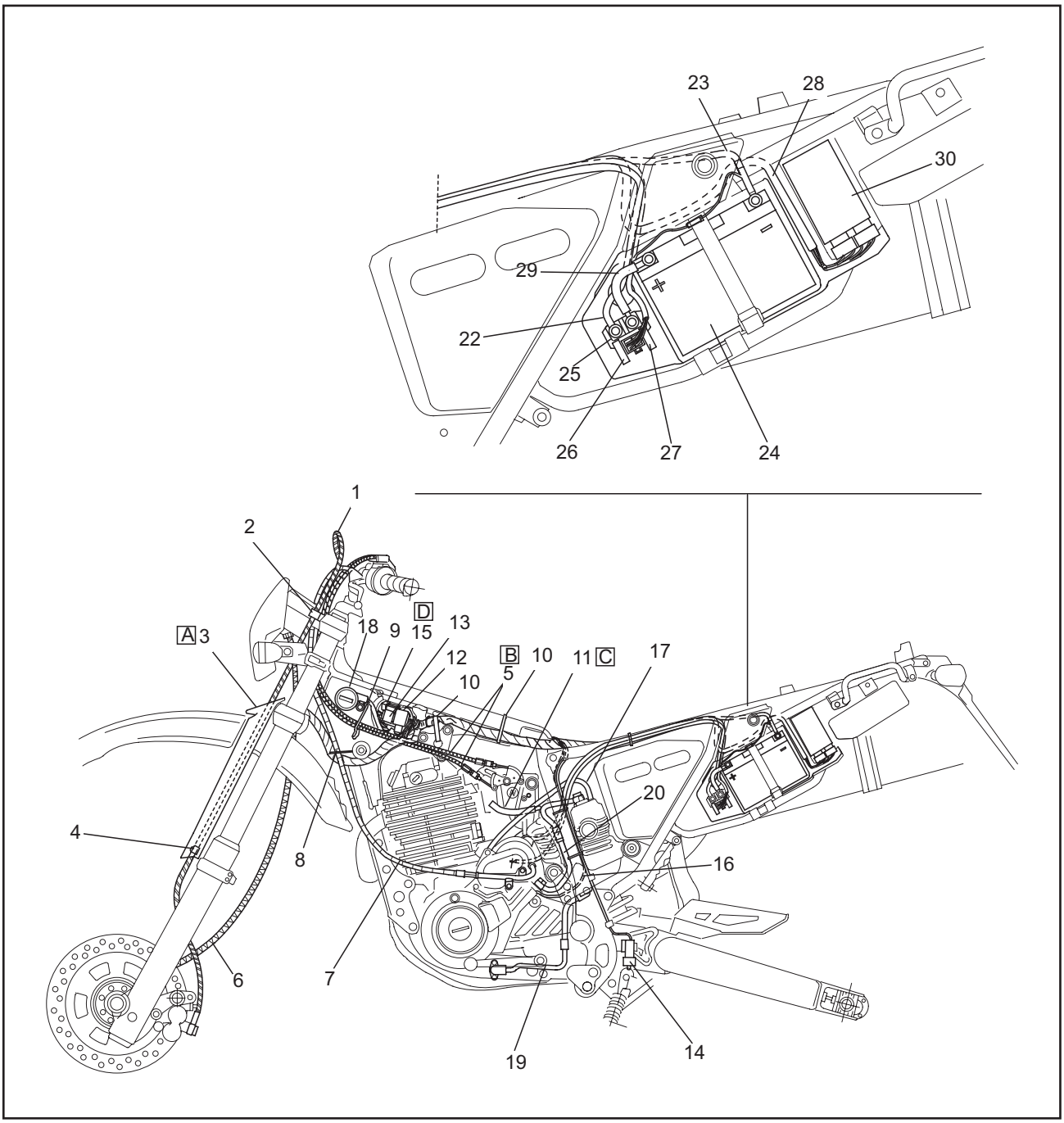

(1) Tachometer/ odometer cable
(2) Tachometer/ odometer cable holder
(3) Tachometer/ odometer cable band
(4) Right tube guard
(5) Spark plug cable
(6) Horn
(7) Carburetor suction pipe
(8) Main wire harness band
(9) Rear brake switch wire harness
(10) Rear brake fluid tank hose
(11) Hose from rear master cylinder to caliper
(12) Rear brake hose holders
(13) Pipe
(14) Air breather pipe
(15) Spark plug ignition coil
(16) Chassis ground
(17) Engine oil breather pipe (to air filer case)

[**A**] Insert the tachometer/ odometer cable into the band 3 and the holder 2.

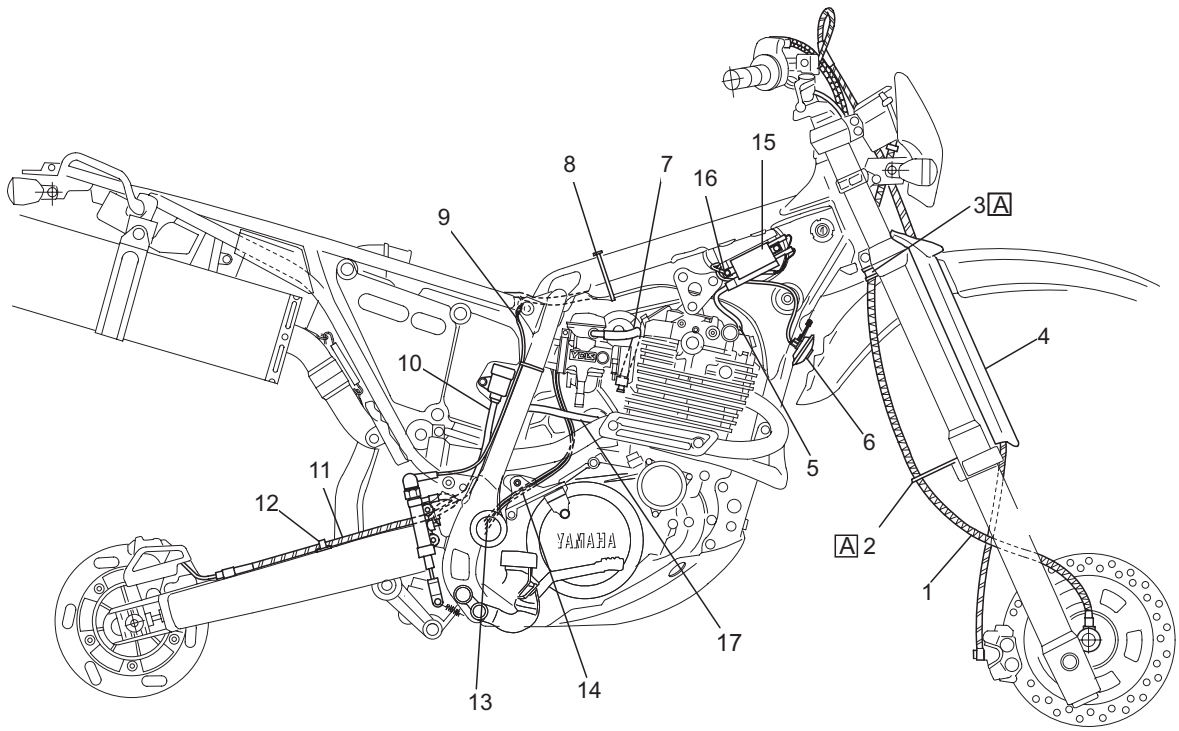

(1) Rectifier
(2) Wire harness bands
(3) Protection
(4) Left turn wire harness
(5) Right turn wire harness
(6) Tail light wire harness
(7) Air breather pipe (carburetor)
(8) Wire extension
(9) Starter power cables
(10) Engine cables and side stand switch

[**A**] Screw protection 3 after setting wiring properly.

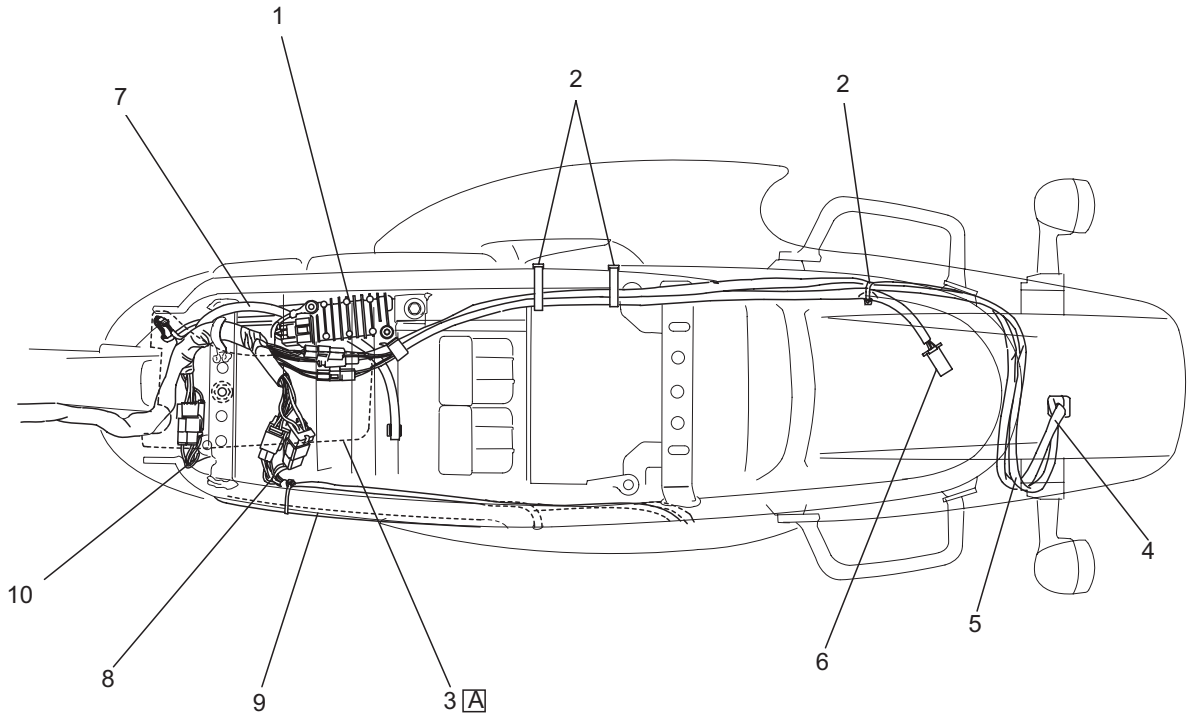

INSP ADJ 3

CHAPTER 3.
PERIODIC INSPECTION AND ADJUSTMENTS

INTRODUCTION 3-1

PERIODIC MAINTENANCE/LUBRICATION INTERVALS 3-1

SEAT, FUEL TANK AND REAR COWLING 3-3
- REMOVAL 3-3
- INSTALLATION 3-3

ENGINE 3-4
- VALVE CLEARANCE ADJUSTMENT 3-4
- DRIVE CHAIN ADJUSTMENT 3-7
- IDLE SPEED ADJUSTMENT 3-7
- THROTTLE CABLE FREE PLAY ADJUSTMENT 3-8
- SPARK PLUG INSPECTION 3-9
- IGNITION TIMING CHECK 3-11
- COMPRESSION INSPECTION 3-12
- ENGINE OIL LEVEL CHECK 3-15
- ENGINE OIL REPLACEMENT 3-17
- ENGINE OIL PRESSURE CHECK 3-21
- CLUTCH ADJUSTMENT 3-21
- AIR FILTER CLEANING 3-24
- FUEL FILTER CLEANING 3-25
- ENGINE OIL TANK FILTER CLEANING 3-26
- SUCTION HOSE AND MANIFOLD INSPECTION 3-28
- FUEL LINE INSPECTION 3-28
- CRANKCASE VENTILATION HOSE INSPECTION 3-29
- EXHAUST SYSTEM INSPECTION 3-29

CHASSIS 3-30
- ADJUSTING THE FRONT BRAKE 3-30
- ADJUSTING THE REAR BRAKE 3-31
- CHECKING THE BRAKE FLUID LEVEL 3-32
- BRAKE PAD WEAR INSPECTION 3-33
- BRAKE HOSING INSPECTION 3-33
- BRAKE CIRCUIT BLEEDING 3-34
- DRIVE CHAIN SLACK INSPECTION AND ADJUSTMENT 3-35
- DRIVE CHAIN LUBRICATION 3-36
- FRONT FORK INSPECTION 3-37
- ADJUSTING THE FRONT FORK 3-37
- REAR SHOCK ABSORBER ADJUSTMENT 3-38
- STEERING INSPECTION 3-40
- TYRE INSPECTION 3-41
- WHEEL INSPECTION 3-44
- SPOKE INSPECTION AND TIGHTENING 3-44
- CABLE INSPECTION 3-45
- LEVER AND PEDAL LUBRICATION 3-45
- SIDESTAND LUBRICATION 3-46
- REAR SUSPENSION LUBRICATION 3-46

ELECTRICAL SYSTEM 3-47
CHECKING AND CHARGING THE BATTERY 3-47
CHECKING THE FUSES 3-53
REPLACING THE HEADLIGHT BULBS 3-54
REPLACING THE TURN INDICATOR LIGHT BULB.....3-56
REPLACING THE TAIL/BRAKE LIGHT BULB.....3-57

PERIODIC INSPECTION AND ADJUSTMENTS

INTRODUCTION

This chapter includes all information necessary to perform recommended inspections and adjustments. These preventive maintenance procedures, if followed, will ensure more reliable vehicle operation and a longer service life. The need for costly overhaul work will be greatly reduced. This information applies to vehicles already in service as well as to new vehicles that are being prepared for sale. All service technicians should be familiar with this entire chapter.

PERIODIC MAINTENANCE/LUBRICATION INTERVALS

N0.		ITEM	CHECK OR MAINTENANCE JOB	ODOMETER READING (x 1,000 km)					ANNUAL CHECK
				1	10	20	30	40	
1	*	Fuel line	• Check fuel hoses for cracks or damage.		✓	✓	✓	✓	✓
2		Spurk plug	• Check condition. • Clean and regap.		✓		✓		
			• Replace.			✓		✓	
3	*	Valves	• Check valve clearance. • Adjust.		✓	✓	✓	✓	
4		Air filter element	• Clean.		✓		✓		
			• Replace.			✓		✓	
5		Clutch	• Check operation. • Adjust.	✓	✓	✓	✓	✓	
6	*	Front brake	• Check operation, fluid level and vehicle for fluid leakeage. (See NOTE).	✓	✓	✓	✓	✓	✓
			• Replace brake pads.	Whenever worm to the limit					
7	*	Rear brake	• Check operation, fluid level and vehicle for fluid leakage. (See NOTE).	✓	✓	✓	✓	✓	✓
			• Replace brake pads.	Whenever worm to the limit					
8	*	Brake hoses	• Check for cracks or damage.		✓	✓	✓	✓	✓
			• Replace. (See NOTE).	Every 4 years					
9	*	Wheels	• Check runout, spoke tightness and for damage. • Tighten spokes if necessary.			✓	✓	✓	✓
10	*	Tyres	• Check tread depth and for damage. • Replace if necessary. • Check air pressure. • Correct if necessary.		✓	✓	✓	✓	✓
11	*	Wheel bearings	• Check bearing for looseness or damage.		✓	✓	✓	✓	
12	*	Swingarm	• Check operation and for excessive play.		✓	✓	✓	✓	
13	*	Drive chain	• Check chain slack. • Make sure that the rear wheel is properly aligned. • Clean and lubricate.	Every 500 km and after washing the motorcycle or riding in the rain.					
14	*	Steering bearings	• Check bearing play and steering for roughness.	✓	✓	✓	✓	✓	
			• Lubrificate with lithium-soap-based grease.	Every 20,000 km					
15	*	Chassis fasteners	• Make sure that all nuts, bolts and screws are properly tightened.		✓	✓	✓	✓	✓
16		Sidestand	• Check operation. • Lubricate.		✓	✓	✓	✓	✓
17	*	Sidestand switch	• Check operation and for oil leakage.	✓	✓	✓	✓	✓	✓

N0.		ITEM	CHECK OR MAINTENANCE JOB	ODOMETER READING (x 1,000 km)					ANNUAL CHECK
				1	10	20	30	40	
18	*	**Rear brake**	• Check operation, fluid level and vehicle for fluid leakage.		✓	✓	✓	✓	
19	*	**Rear shock absorber assembly**	• Check operation and shock absorber for oil leakage. sull'ammortizzatore.		✓	✓	✓	✓	
20	*	**Rear suspension relay arm and connecting arm pivoting points**	• Check operation.		✓	✓	✓	✓	
			• Lubricate with lithium-soap-based grease.			✓		✓	
21	*	**Carburator**	• Check starter (choke) operation. • Adjust engine idling speed.	✓	✓	✓	✓	✓	✓
22		**Engine oil**	• Change. • Check oil level and oil leakage.	✓	✓	✓	✓	✓	✓
23		**Engine oil filter element**	• Replace.	✓		✓		✓	
24	*	**Front and rear brake switches**	• Check operation.	✓	✓	✓	✓	✓	✓
25		**Moving parts and cables**	• Lubricate.		✓	✓	✓	✓	✓
26	*	**Throttle grip housing and cable**	• Check operation and free play. • Adjust the throttle cable free play if necessary. • Lubricate the throttle grip housing and cable.		✓	✓	✓	✓	✓
27	*	**Muffler and exhaust pipe**	• Check the screw clamp for looseness.	✓					
28	*	**Lights, signals and switches**	• Check operation. • Adjust headlight beam.	✓	✓	✓	✓	✓	✓

* Items marked with an asterisk should be performed by a Yamaha dealer as they require special tools, data and technical skills.

NOTE:

- The annual checks must be performed every year, except if a kilometer-based maintenance is performed instead.
- From 50,000 km, repeat the maintenance intervals starting from 10,000 km.
- The air filter needs more frequent service if you are riding in unusually wet or dusty areas.
- Hydraulic brake system:
  - Check the brake fluid level regularly and fill as required.
  - Replace the oil seals on the inner parts of the master cylinder and caliper cylinder every two years.
  - Replace the brake hoses every four years or if cracked or damaged.

SEAT, FUEL TANK AND REAR COWLING

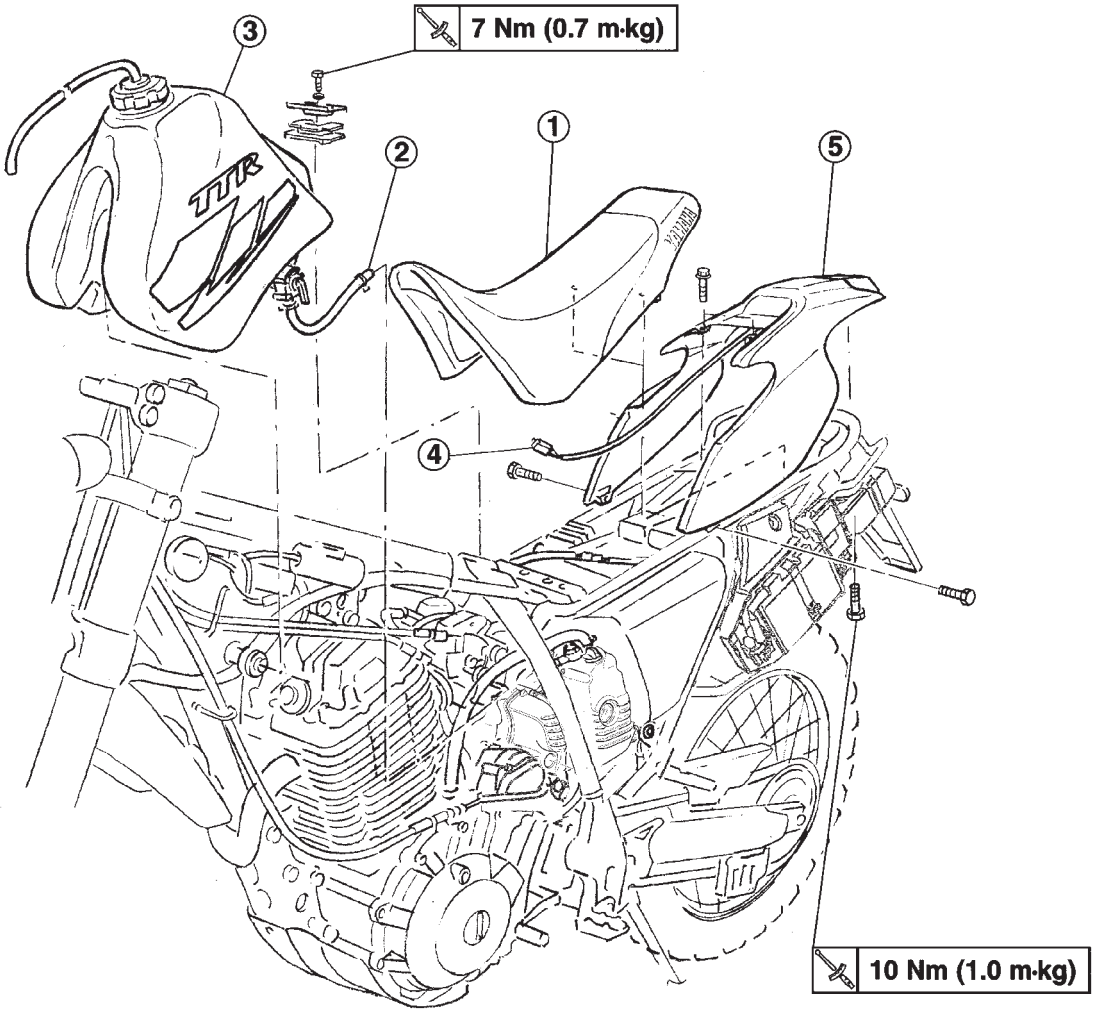

Order	Job name/Part name	Q.ty	Remarks
	Seat, fuel tank and rear cowling removal		Remove the parts in order.
1	Seat	1	
2	Fuel pipe	1	**NOTE:** Be sure the cap is properly tightened and the fuel cock is in the “OFF” position before removing the tank.
3	Fuel tank	1	
4	Lamp connector	1	Disconnect.
5	Rear cowling	1	**NOTE:** Widen the rear cowling body sides carefully to extract rear cowling from the chassis.
			Reverse the removal procedure for installation.

ENGINE

VALVE CLEARANCE ADJUSTMENT

NOTE:

- Valve clearance must be adjusted when the engine is at ambient temperature.
- Adjust valve clearance with the piston under compression at top dead centre (T.D.C.).

WARNING

Hold the motorcycle firmly in place to prevent it falling over during the operation.

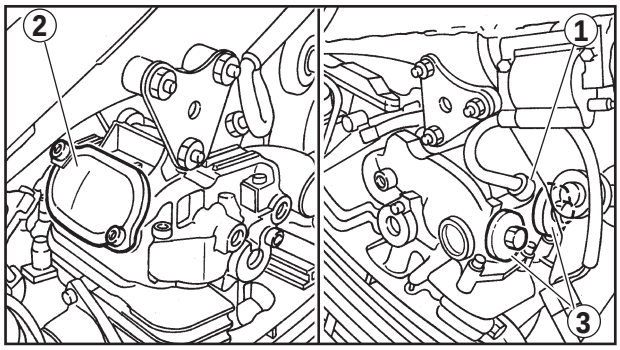

1. Remove:
   - Seat
   - Fuel tank
     See the section " SEAT, FUEL TANK AND REAR COWLING".
2. Disconnect:
   - Spark plug cap (1)
3. Remove:
   - Spark plug
   - Tappet cover (2) (intake)
   - Tappet covers (3) (exhaust)

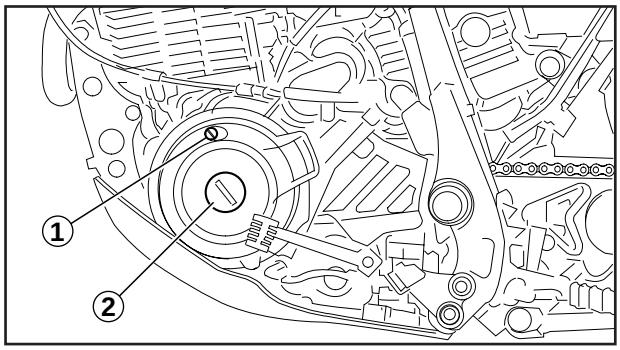

CAUTION:

When removing the spark plug and tappet cover, be careful not to drop foreign objects inside the engine.

4. Remove:
   - Cap (1)
   - Cap (2)
5. Turn the crankshaft anticlockwise using a wrench.

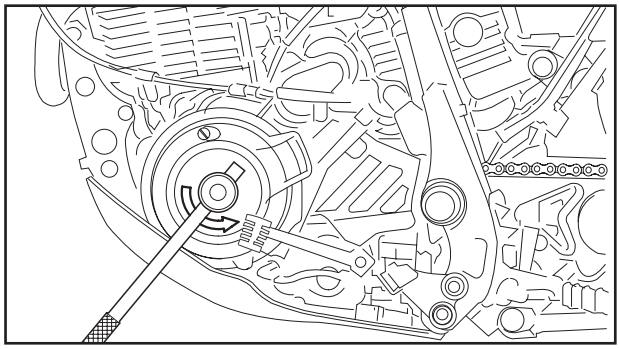

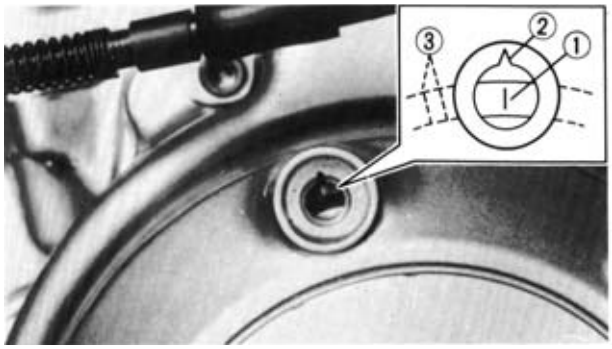

6. Align:
   - Reference mark “T” on the flywheel (1) with the fixed reference mark on the crankcase (2).

NOTE:
Check that the piston is under compression at top dead centre (T.D.C.).

(3) Ignition timing reference mark

7. Check:
   - Valve clearance
     Out of specification → Adjust.

Valve clearance (cold):
Intake:
0.05 ~ 0.10 mm
Exhaust:
0.12 ~ 0.17 mm

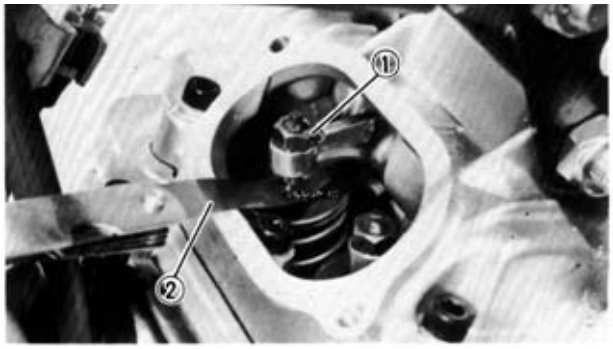

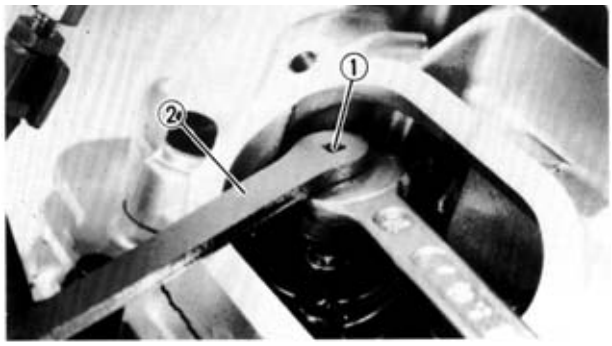

8. Adjust:
   - Valve clearance

▼▼▼▼▼▼▼▼▼▼▼▼▼▼▼▼▼▼▼▼▼▼▼▼▼▼▼▼▼▼▼▼

Adjustment:
- Loosen the lock nut (1).
- Fit a thickness gauge (2) between the rocker arm and the valve stem.
- Turn the adjuster (1) clockwise or anticlockwise using the special tool (2) to obtain the required clearance.

Special tool:
P/N. 90890-01311

- Holding the adjuster firmly in place, lock tighten lock nut.

Lock nut:
14 Nm (1.4 mkg)

- Measure valve clearance.
  If the clearance is incorrect, repeat the previous stages to achieve the required value.

▲▲▲▲▲▲▲▲▲▲▲▲▲▲▲▲▲▲▲▲▲▲▲▲▲▲▲▲▲▲▲▲

9. Reassemble:
   - Caps
   - Tappet cover (intake)
   - Tappet covers (exhaust)
   - Spark plug

Tappet cover (exhaust):
12 Nm (1.2 mkg)
Bolt (tappet cover - intake):
10 Nm (1.0 mkg)
Spark plug:
18 Nm (1.8 mkg)

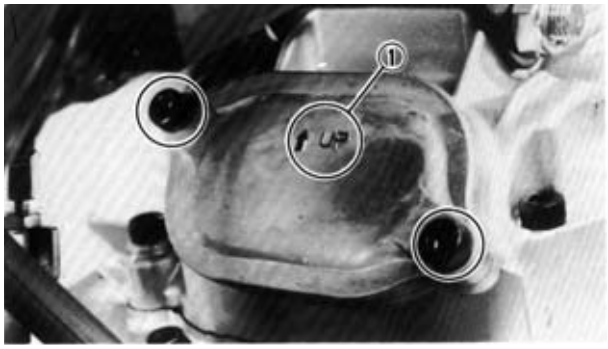

NOTE:
The tappet cover (intake) should be mounted with arrow (1) pointing upwards.

10. Connect:
    - Spark plug cap
11. Reassemble:
    - Fuel tank
    - Seat
      See section “SEAT, FUEL TANK AND REAR COWLING”.

Seat screws:
10 Nm (1.0 mkg)

DRIVE CHAIN ADJUSTMENT

The drive chain does not need to be adjusted.

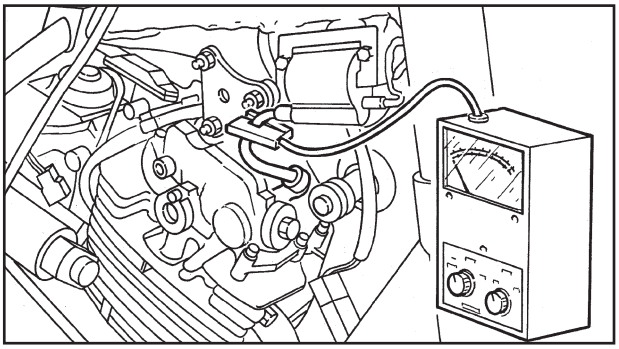

IDLE SPEED ADJUSTMENT

1. Start the engine and let it heat.
2. Connect:
   - The inductive engine speed indicator to the spark plug cable

	Special tool: **P/N. 90890-03113**

3. Check:
   - The engine idle speed.
     Out of specification → Adjust.

	Engine idle speed: **1,150 ~ 1,450 rpm**

4. Adjust:
   - Engine idle speed

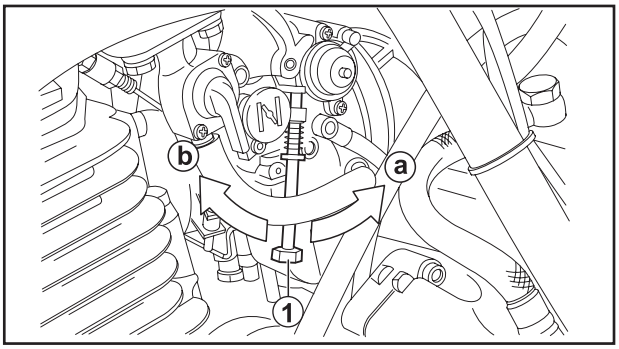

▼▼▼▼▼▼▼▼▼▼▼▼▼▼▼▼▼▼▼▼▼▼▼▼▼▼▼▼▼▼▼▼

Adjustment:

- Turn the throttle stop screw (1) either way to obtain the idle speed required.

Screwing (a)	**Increases idle speed**
Unscrewing (b)	**Decreases idle speed**

▲▲▲▲▲▲▲▲▲▲▲▲▲▲▲▲▲▲▲▲▲▲▲▲▲▲▲▲▲▲▲▲

NOTE:

After setting the idle speed, adjust the accelerator cable free play.

5. Disconnect:
   - Inductive engine speed indicator

THROTTLE CABLE FREE PLAY ADJUSTMENT

NOTE:
Before adjusting the throttle cable free play, adjust the engine idle speed.

1. Remove:
   - Seat
   - Fuel tank
     See section “SEAT, FUEL TANK AND REAR COWLING”.

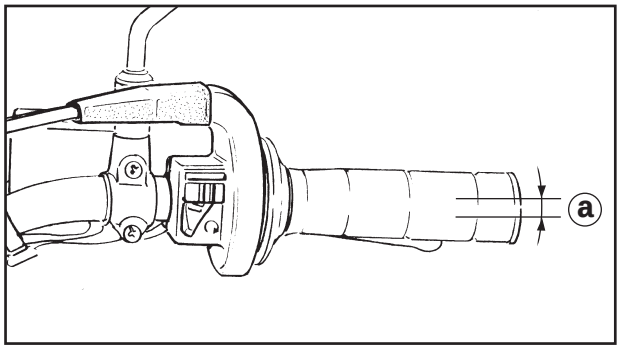

2. Check:
   - Throttle cable free play (a)
     Out of specification → Adjust.

Throttle cable free play:
3 ~ 5 mm (at the grip flange)

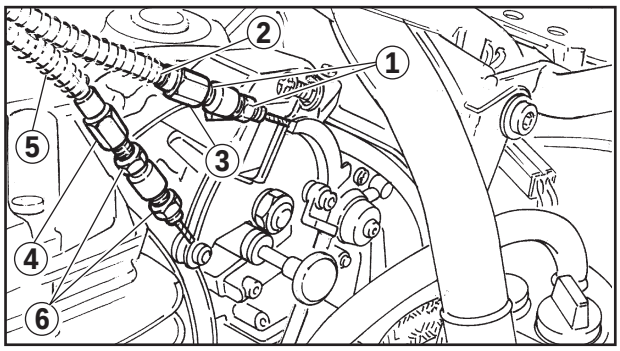

3. Adjust:
   - Throttle cable free play

▼▼▼▼▼▼▼▼▼▼▼▼▼▼▼▼▼▼▼▼▼▼▼▼▼▼▼▼▼▼

Adjustment:
- Loosen the throttle cable (2) lock nuts (1).
- Turn the adjuster (3) clockwise or anticlockwise to obtain the required free play.
- If after loosening the adjuster by 5 mm, the free play is still not correct, tighten the adjuster (4) on the throttle cable (5) once more.
- Tighten the lock nuts.

(1), (6) Lock nuts

▲▲▲▲▲▲▲▲▲▲▲▲▲▲▲▲▲▲▲▲▲▲▲▲▲▲▲▲▲▲

4. Reassemble:
   - Fuel tank
   - Seat
     See section “SEAT, FUEL TANK AND REAR COWLING”.

Seat screws:
10 Nm (1,0 mkg)

SPARK PLUG INSPECTION

1. Remove:
   - Seat
   - Fuel tank
     See section “SEAT, FUEL TANK AND REAR COWLING”.

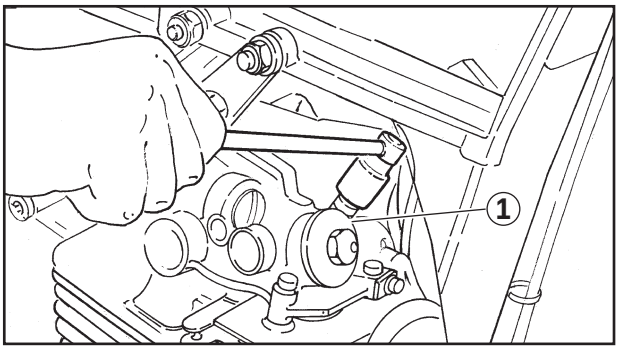

2. Disconnect:
   - Spark plug cap
3. Remove:
   - Spark plug (1)

CAUTION:

Before removing the spark plug, use compressed air to blow away any dirt accumulated in the spark plug wells to prevent it from falling into the cylinder.

CAUTION:

When removing the spark plug, be careful not to drop foreign objects inside the engine.

4. Inspect:
   - Type of spark plug
     Incorrect → Replace.

Standard spark plug:
DPR8EA-9 (N.G.K.) or DPR9EA-9 (N.G.K.)

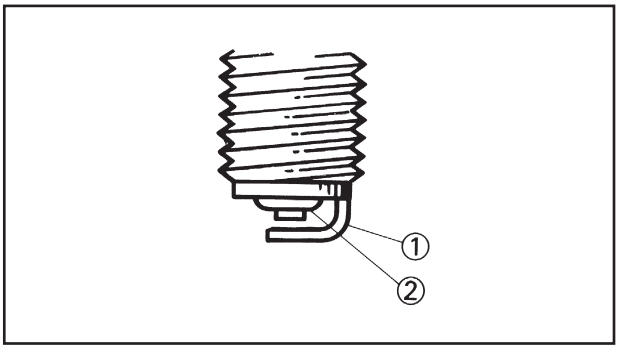

5. Inspect:
   - Electrodes (1)
     Wear and tear/damage → Replace.
   - Insulator (2)
     Normal insulator (2) colour is light tan.

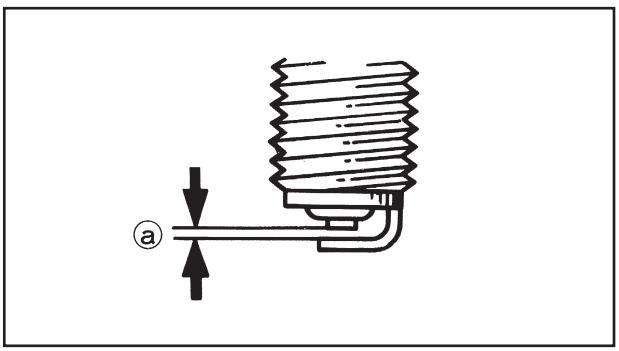

6. Clean the spark plug with a suitable tool and a steel brush.
7. Measure:
   - Spark plug electrode gap (a)
     Use a wire or thickness gauge.
     Out of specification → Regap.

Electrode gap:
0.8 ~ 0.9 mm

8. Lock tighten:
   - Spark plug
     Before installing the spark plug, clean the surface and thread.

	Spark plug: **18 Nm (1.8 mkg)**

NOTE:
Tighten the spark plug by hand before torquing to specification.

9. Connect:
   - Spark plug cap
10. Install:
   - Fuel tank
   - Seat
     See section “SEAT, FUEL TANK AND REAR COWLING”.

	Seat screws: **10 Nm (1.0 mkg)**

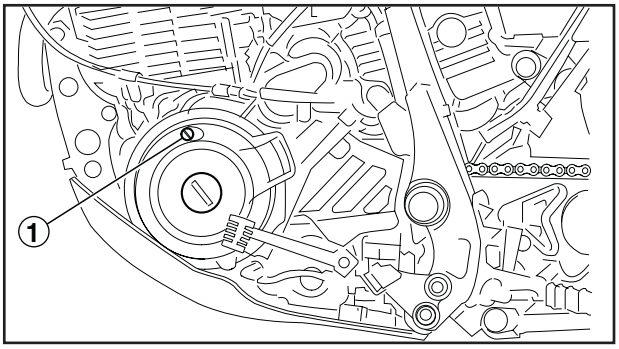

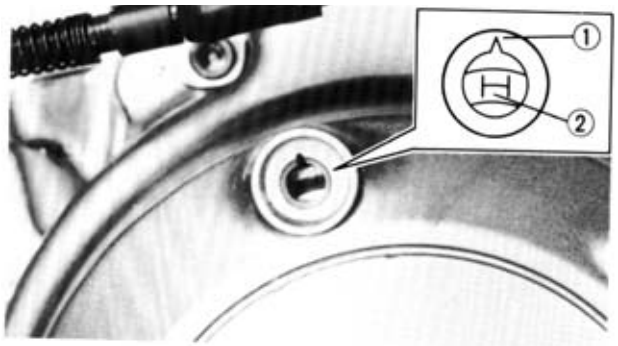

IGNITION TIMING CHECK

1. Start the engine and let it heat.
2. Connect:
   - Inductive rev counter
   - Stroboscopic lamp to spark plug cable

Inductive engine speed indicator:
P/N. 90890-03113
Stroboscopic lamp:
P/N. 90890-03141

3. Remove:
   - Cap (1)

CAUTION:

In certain conditions, the oil might spray out when the cap is removed. Be careful therefore when removing the cap.

4. Check:
   - Ignition advance

▼▼▼▼▼▼▼▼▼▼▼▼▼▼▼▼▼▼▼▼▼▼▼▼▼▼▼▼▼▼▼▼

Check:

- Heat engine and let it run to the number of revs required.

Engine idle speed:
1,150 ~ 1,450 rpm

- Check that reference (1) is in the mobile field of reference (2) on the flywheel.
  Incorrect ignition timing → Check the ignition coil unit.

NOTE:

Ignition timing cannot be adjusted.

▲▲▲▲▲▲▲▲▲▲▲▲▲▲▲▲▲▲▲▲▲▲▲▲▲▲▲▲▲▲▲▲

5. Install:
   - Cap
6. Remove:
   - Stroboscopic lamp
   - Inductive engine speed indicator

COMPRESSION INSPECTION

NOTE:
Insufficient compression causes a loss of performance.

WARNING

Set the motorcycle firmly in place to prevent it falling during the operation.

1. Remove:
   - Seat
   - Fuel tank
     See section “SEAT, FUEL TANK AND REAR COWLING”.
2. Check:
   - Valve clearance
     Out of specification → Adjust.
     See section “VALVE CLEARANCE ADJUSTMENT”.
3. Install:
   - Secondary fuel tank
4. Start engine and let it heat.
   - Switch off engine.
5. Disconnect:
   - Spark plug cap

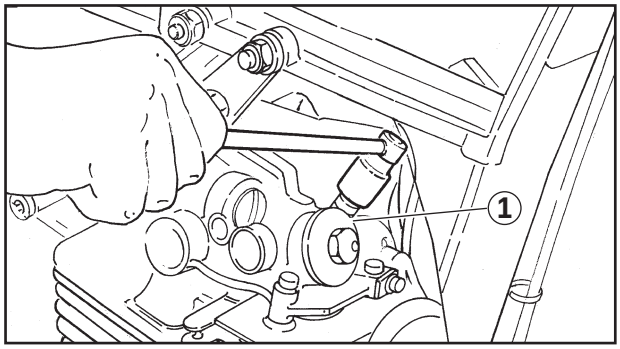

6. Remove:
   - Spark plug (1)

CAUTION:

When removing the spark plug, be careful to prevent foreign bodies from dropping inside the engine.

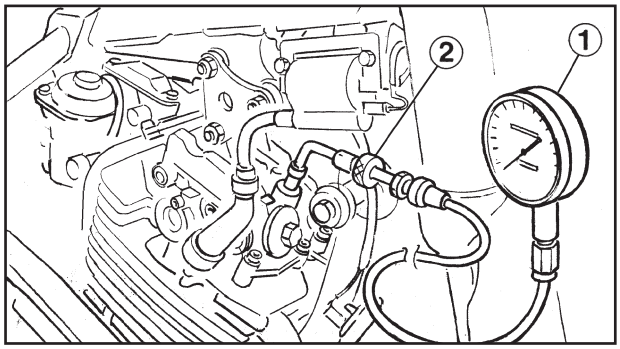

7. Apply:
   - Pressure gauge (1)
   - Adapter (2)

Pressure gauge:
P/N. 90890-03081
Adapter:
P/N. 90890-04082

8. Check:
   - Pressure under compression

▼▼▼▼▼▼▼▼▼▼▼▼▼▼▼▼▼▼▼▼▼▼▼▼▼▼▼▼▼▼▼▼▼▼

Inspection:

- Turn the main switch to "ON".
- With the throttle wide open, crank the engine until the reading on the compression gauge stabilized.

WARNING

While operating the starter, disconnect the spark plug cap to avoid sparks.

- Compare the pressure reading with those in the table.

Pressure under compression:
Standard
1,100 kPa (11 kg/cm², 156 psi)
Minimum
900 kPa (9 kg/cm², 128 psi)
Maximum
1.200 kPa (12 kg/cm², 171 psi)

- If the pressure reading is lower than minimum:

1) Add a few drops of oil to the cylinder through the hole in the spark plug.
2) Measure the compression again.
3) Compare the new reading with the first, then proceed according to the indications in the table.

Pressure under compression: (after adding oil to the cylinder)	
Reading	**Diagnosis**
Pressure higher than before	**Piston worn or damaged.**
Pressure same as before	**Cylinder head or piston rings, valves, gaskets may be faulty.**
Pressure above maximum value	**Inspect cylinder head, valve surfaces, piston rim to check for carbon deposits.**

▲▲▲

ENGINE OIL LEVEL CHECK

CAUTION:

Do not put additives into the engine oil. The latter also lubricates the clutch and additives might cause it to slide.

WARNING

Never remove the oil tank cap when the engine is hot. The boiling oil might spill over, causing burns. Wait for the oil to cool to at least 60°C (140°F) or thereabouts.

This model is fitted with a dry crankcase lubrication system. A feed pump delivers oil to the engine; after fully lubricating the latter, the oil is returned to the tank by a scavenge pump. The oil level must therefore be checked in the oil tank.

1. Start the engine and warm up until the oil temperature rises to approximately 60°C (140°F).
2. Idle the engine for at least 10 seconds while keeping the motorcycle upright. After stop the engine and check the oil level through the level window (3) located on the left side of the oil tank assy and(or) by oil level gauge.

NOTE:

Be sure the motorcycle is positioned straight up when checking the oil level. A slight tilt toward the side can result in false readings.

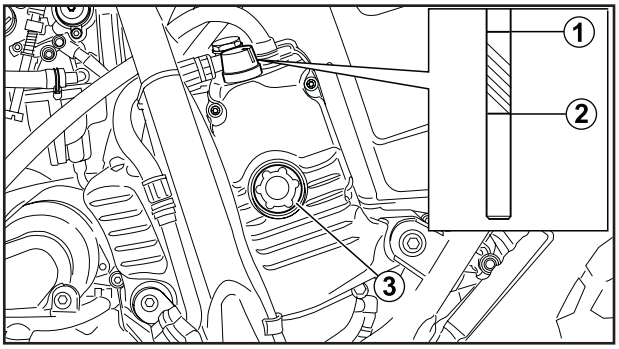

3. The oil level should be between the maximum (1) and minimum (2) marks.

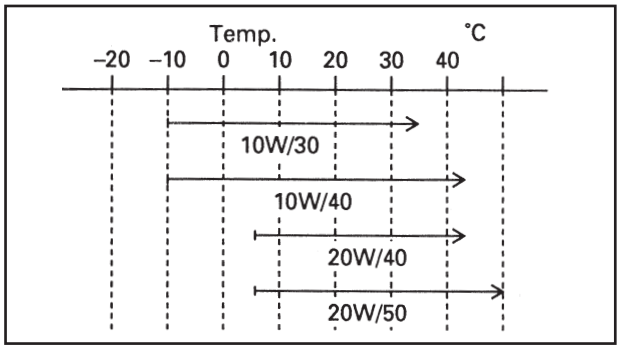

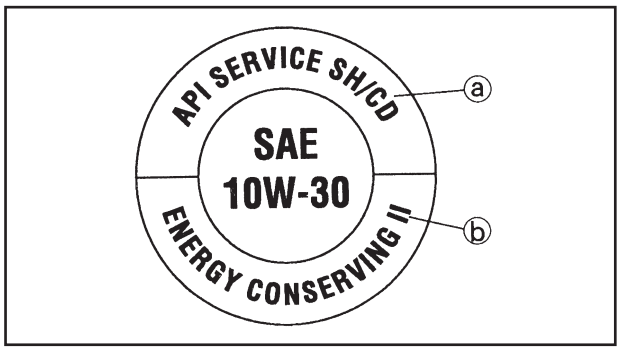

If the oil level is below minimum → Add oil up to maximum level.

Recommended oil:
SAE20W40SE or SAE10W30SE
Refer to the chart for selection of the oils suited to the atmospheric temperature.
API Standard:
API SE, SF, SG or higher grade

CAUTION:

- **Do not put in any chemical additives or use oils with a grade of CD (a) or higher.**
- **Be sure not to use oils labeled "ENERGY CONSERVING II" (b) or higher. Engine oil also lubricates the clutch and additives could cause clutch slippage.**
- **Be sure no foreign material enters the crankcase.**

4. Reassemble the oil tank cap.

CAUTION:

Never start the engine when the oil tank is empty.

Oil capacity:
Total:
3.0 litres
Periodic oil change:
2.4 litres
With oil filter change:
2.5 litres

ENGINE OIL REPLACEMENT

CAUTION:

Do not put additives into the engine oil. The latter also lubricates the clutch and additives might cause it to slide.

WARNING

Never remove the oil tank cap when the engine is hot. The boiling oil might spill over, causing burns. Wait for the oil to cool to at least 60°C (140°F) or thereabouts.

Engine oil replacement (without replacing filter oil)

1. Warm up the engine for a few minutes.
2. Stop the engine. Place an oil pan under the engine and remove the oil filler cap.
3. Remove the drain plug (1) and drain the engine oil.
4. Remove two bolts (2) and O-ring of the oil hose flange, and drain the oil from oil tank.

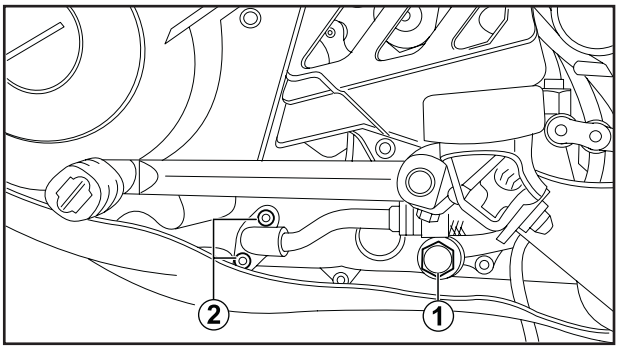

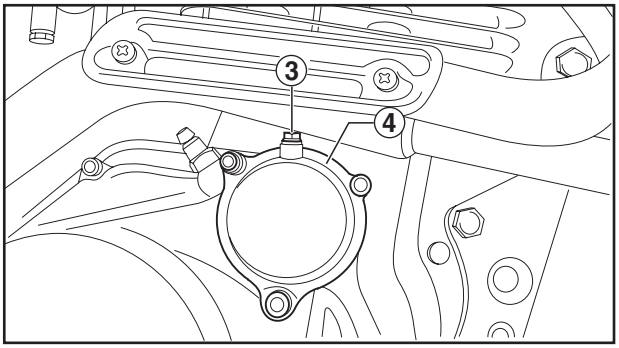

5. Remove the air bleed screw (3) attached to the oil filter cover (4).
6. Wait until the oil has completely drained.

7. Inspect:
   - All gaskets
     Damaged → Replace.
8. Reassemble:
   - Oil filter cover bleeder screw
   - Engine oil drain plug
   - Oil tank hose and O-ring

Fastening torques:
Drain plug (engine):
30 Nm (3.0 mkg)
Oil tank hose (flange):
10 Nm (1.0 mkg)
Oil filter cover air bleeder screw:
5 Nm (0.5 mkg)

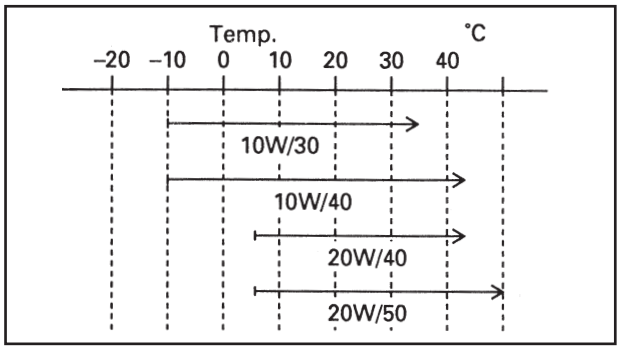

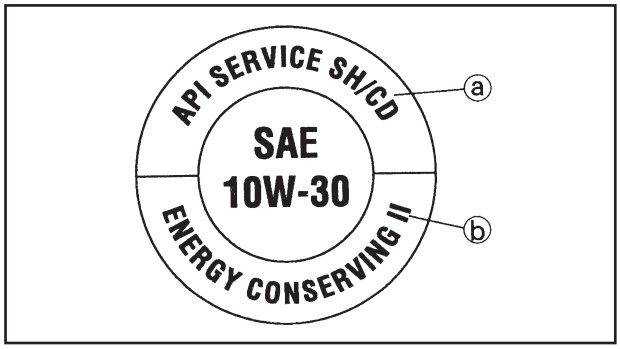

9. Fill:
   - Oil tank

Recommended oil:
SAE20W40SE or SAE10W30SE
Refer to the chart for selection of the oils suited to the atmospheric temperature.
API Standard:
API SE, SF, SG or higher grade
Oil capacity:
Periodic change = 2.4 litres

CAUTION:

- **Do not put in any chemical additives or use oils with a grade of CD (a) or higher.**
- **Be sure not to use oils labeled "ENERGY CONSERVING II" (b) or higher. Engine oil also lubricates the clutch and additives could cause clutch slippage.**
- **Be sure no foreign material enters the crankcase.**

10. Install:
    - Oil tank tap
11. Check:
    - Oil level
      See section "ENGINE OIL LEVEL CHECK".
    - Oil pressure
      See section "ENGINE OIL PRESSURE CHECK".
    - Oil leakage

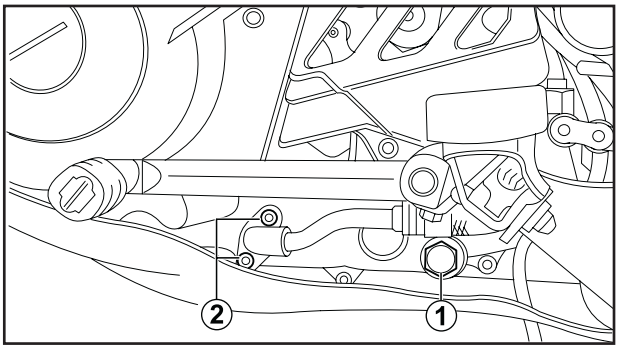

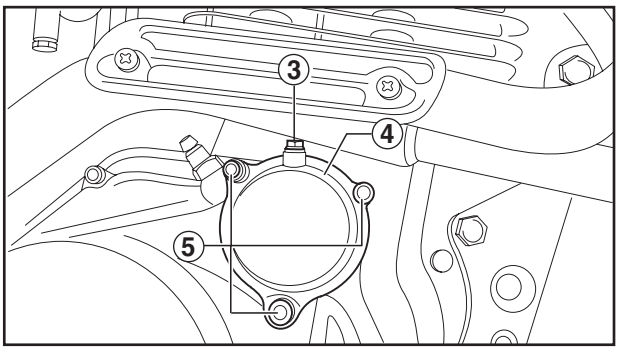

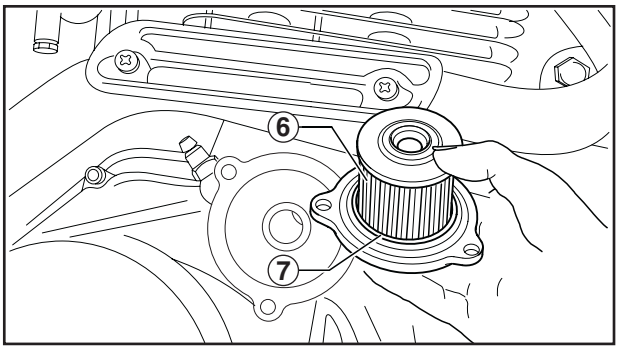

Engine oil replacement (with oil filter replacement)

1. Warm up the engine for a few minutes.
2. Stop the engine. Place an oil pan under the engine and remove the oil filler cap.
3. Remove the drain plug (1) and drain the engine oil.
4. Remove two bolts (2) and O-ring of the oil hose flange, and drain the oil from oil tank.
5. Remove the air bleed screw (3) attached to the oil filter cover (4).
6. Wait until the oil has completely drained.

NOTE:
The oil filter cover is secured by three screws (5). The lower one should be removed so that the filter cavity will drain.

7. Remove the other filter cover screws and remove the oil filter cover.
8. Remove the oil filter (6) and O-ring (7).
9. Inspect:
   - All gaskets
   - O-rings
     Damaged → Replace.

10. Reassemble:
    - (New) filter cartridge
    - Filter cover screw
    - Oil filter cover bleeder screw
    - Engine drain plug
    - Oil tank hose

Fastening torques:
Drain plug (engine):
30 Nm (3.0 mkg)
Oil tank hose (flange):
10 Nm (1.0 mkg)
Filter cover screw:
10 Nm (1.0 mkg)
Oil filter cover bleeder screw:
5 Nm (0.5 mkg)

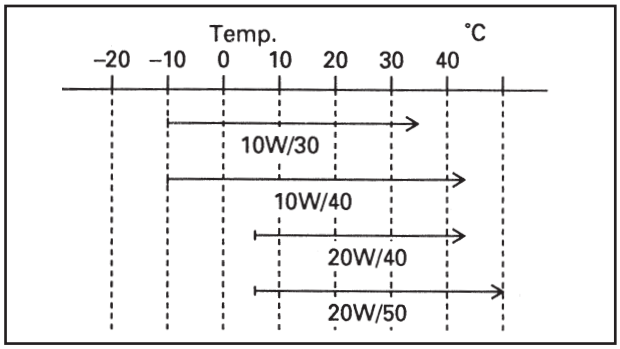

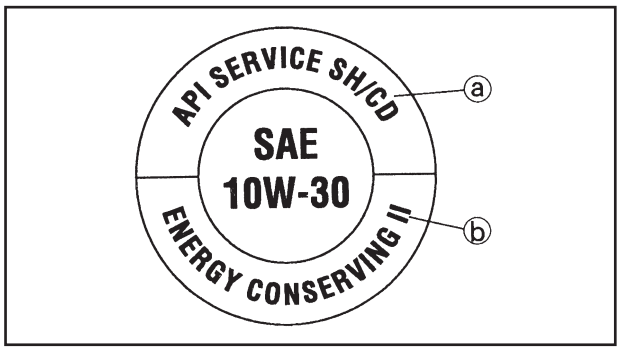

11. Fill:
    - Oil tank

Recommended oil:
SAE20W40SE or SAE10W30SE
Refer to the chart for selection of the oils suited to the atmospheric temperature.
API Standard:
API SE, SF, SG or higher grade
Oil capacity:
Total:
3.0 litres
Periodic oil change:
2.4 litres
With oil filter change:
2.5 litres

CAUTION:

- **Do not put in any chemical additives or use oils with a grade of CD (a) or higher.**
- **Be sure not to use oils labeled "ENERGY CONSERVING II" (b) or higher. Engine oil also lubricates the clutch and additives could cause clutch slippage.**
- **Be sure no foreign material enters the crankcase.**

12. Install:
    - Oil tank cap
13. Check:
    - Oil level
      See section "ENGINE OIL LEVEL CHECK".
    - Oil pressure
      See section "ENGINE OIL PRESSURE CHECK".
    - Oil leakage

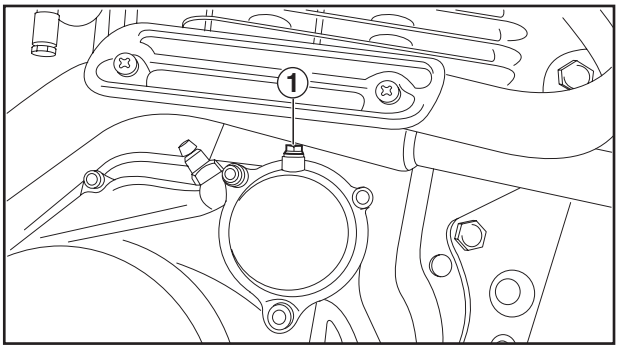

ENGINE OIL PRESSURE CHECK

1. Remove:
   - Bleeder screw (1)
2. Start the engine and keep it idling until oil flows out of the bleed hole.
3. Inspect:
   - Conditions of oil at bleeder hole.
     Oil leakage → Oil pressure good.
     No leakage → Pressure insufficient.

CAUTION:

If the oil does not come out after one minute, stop the engine immediately to prevent seizure.

4. Tighten:
   - Bleeder screw

	Bleeder screw: **5 Nm (0.5 kgm)**

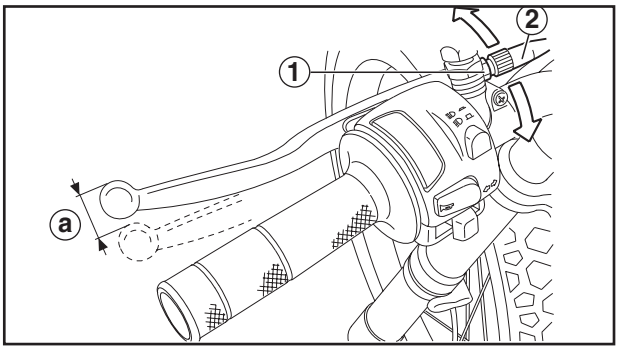

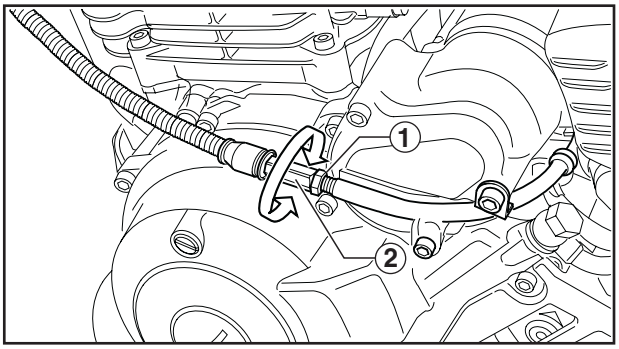

CLUTCH ADJUSTMENT

Cable free play adjustment

1. Check:
   - Clutch free play adjustment (a)
     Out of specification → Adjust.

	Free play: **10 ~ 15 mm**

2. Adjust:
   - Clutch cable free play

▼▼▼▼▼▼▼▼▼▼▼▼▼▼▼▼▼▼▼▼▼▼▼▼▼▼▼▼▼▼▼▼

Adjustment:

- Loosen lock nuts (1).
- Turn the adjuster (2) either way to obtain correct free play.
- Tighten lock nuts after adjustment.

▲▲▲▲▲▲▲▲▲▲▲▲▲▲▲▲▲▲▲▲▲▲▲▲▲▲▲▲▲▲▲▲

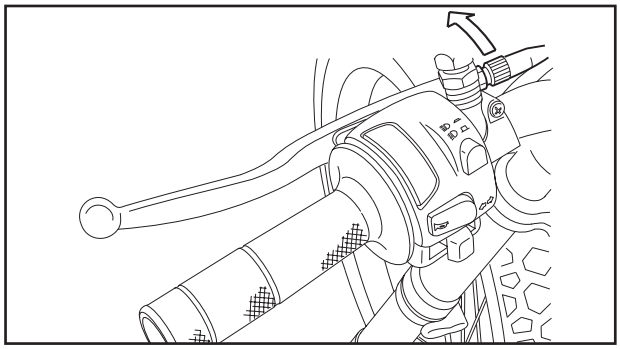

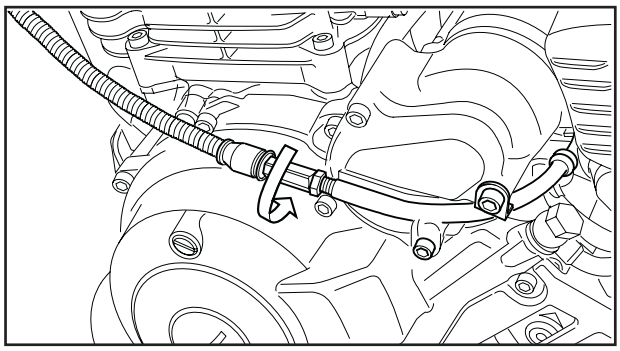

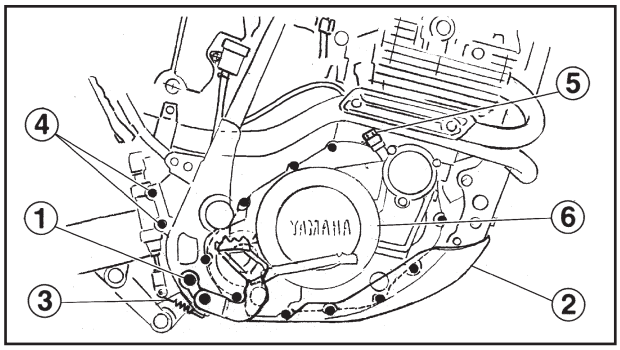

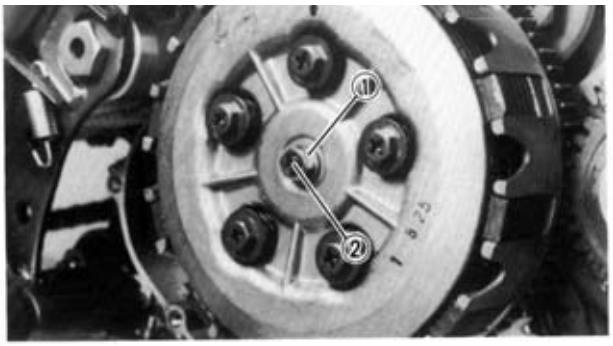

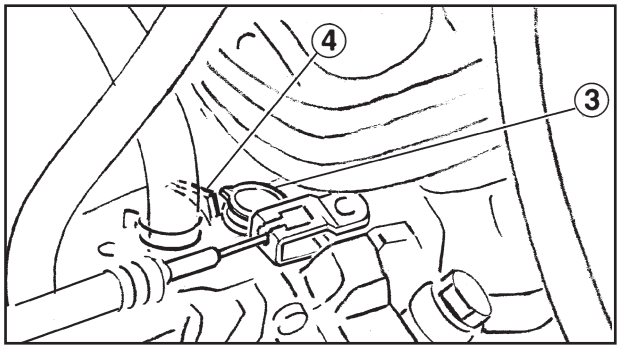

NOTE:

After adjustment, recheck lever free play to make sure that it works smoothly and progressively.
If it is impossible to obtain the required adjustment or if the clutch does not work properly, adjust the internal mechanism.

Internal mechanism adjustment

1. Loosen:
   - Lock nuts on the lever cable adjuster and crankcase adjuster
2. Fully tighten:
   - Adjusters
3. Drain off:
   - Engine oil
     See section “ENGINE OIL REPLACEMENT”.
4. Remove:
   - Footrest (right) (1)
   - Engine protector (2)
5. Disconnect:
   - Brake pedal return spring (3)
6. Remove:
   - Rear master cylinder fastening screws (4)
   - Oil delivery hose fastening screw (5)
   - Right crankcase cover fastening screws
   - Right crankcase cover (6)
7. Loosen:
   - Lock nut (1)
8. Push the engine clutch control lever forward to the stop point.
9. Adjust:
   - Free play
     With the lever in this position, turn the adjuster (2) either way until the marks on the lever (3) and crankcase (4) are aligned.
10. Tighten:
    - Lock nut (1)

	Lock nut: **8 Nm (0.8 mkg)**

11. Install:
    - Right crankcase cover
    - Right crankcase cover fastening screws
    - Oil delivery hose fastening screw

Screw (crankcase cover):
10 Nm (1.0 mkg)
Oil delivery hose screw:
18 Nm (1.8 mkg)

12. Connect:
    - Brake pedal return spring
    - Rear master cylinder

Screw (rear master cylinder):
10 Nm (1.0 mkg)

13. Reassemble:
    - Footrest (right)

Bolt (footrest):
48 Nm (4.8 mkg)

    - Engine protector
14. Fill:
    - Engine oil tank
      See section “ENGINE OIL REPLACEMENT”.
15. Adjust:
    - Clutch cable free play

Free play (at lever tip):
10 ~ 15 mm

See section “Cable free play adjustment”.

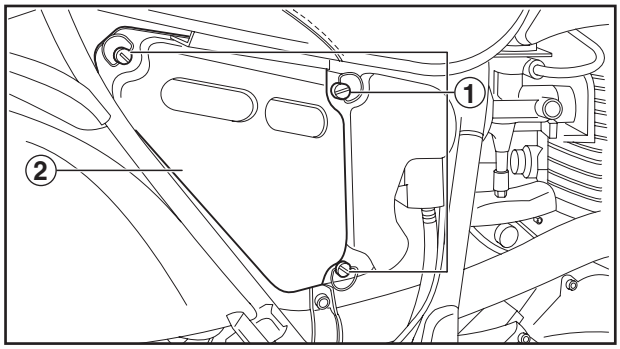

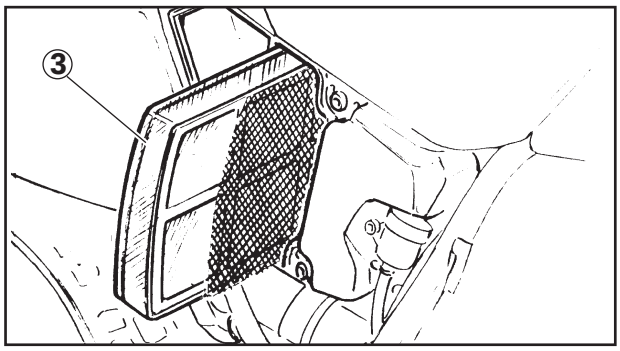

AIR FILTER CLEANING

1. Remove:
   - Fast screws (1)
   - Air filter box cap (2)
2. Pull out:
   - Filtering element (3) from its seat
3. Wash:
   - Filtering element (with water and biodegradable liquid soap)

NOTE:
Rinse properly and dry perfectly by squeezing the filtering element, without twisting it!

4. Inspect:
   - Filtering element
     Damaged ➔ Replace.
5. Apply:
   - SAE 20W50 engine oil or special filter oil all over filter surface
6. Squeeze out:
   - Excess oil

NOTE:
The filtering element should be wet but not dripping.

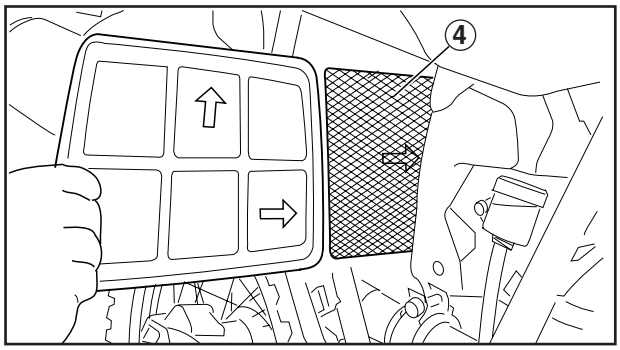

7. Install:
   - Filtering element (4) in its case

NOTE:
When installing the filtering element in its case, follow the direction indicated by the arrows, make sure that the flame-trap net is set forward and that the cap is properly assembled.

8. Reassemble:
   - Air filter box cap
   - Fast screws

CAUTION:

Make sure the air filter is properly seated in the air filter case.
The engine should never be run without the air filter installed. Excessive piston and/or cylinder wear may result.

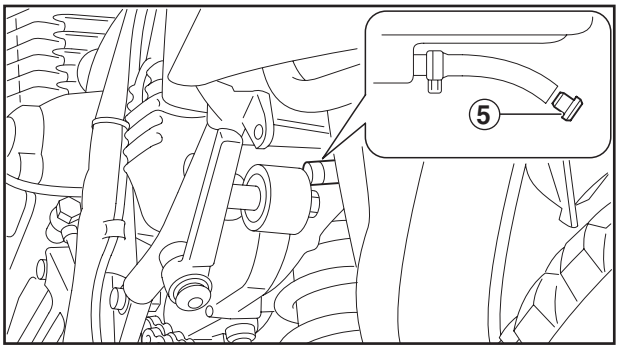

CAUTION:

Periodically check wheter the sleeve on the bottom of the air filter case is empty. Remove the plug (5) and clean it if dirt or water accumulate.

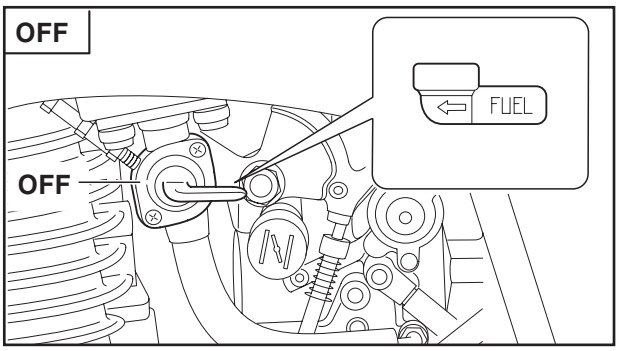

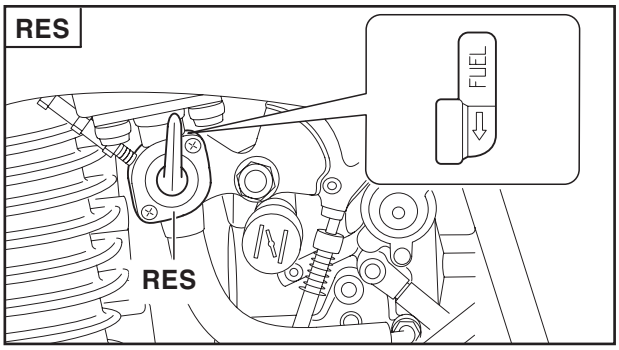

FUEL FILTER CLEANING

1. Turn the fuel cock to "OFF".
2. Disconnect:
   - Fuel pipe from cock
3. Place a fuel pan under the fuel tank and turn the fuel cock to "RES" to drain the fuel.

CAUTION:

Do not bring naked flames or possible sources of sparks near to the fuel tank: FIRE AND EXPLOSION RISK! Be careful not to spill fuel from the tank.
Always wipe off spilled fuel immediately with a dry and clean soft cloth. Fuel may deteriorate painted surfaces or plastic.

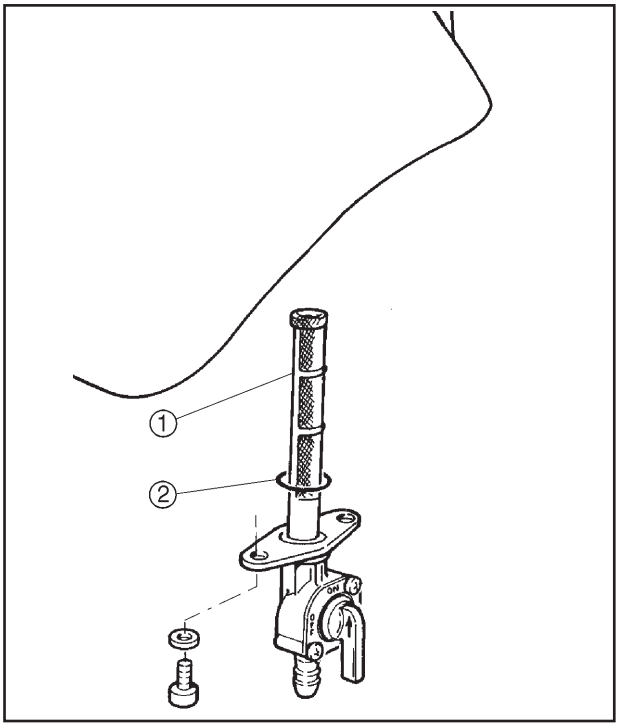

4. Disassemble:
   - The fuel cock from the fuel tank
5. Wash:
   - Fuel filter (1) with solvent
6. Inspect:
   - Fuel filter (1)
   - Gasket (2)
     Damaged → Replace.
7. Reassemble:
   - Fuel cock to tank
   - Fuel pipe to cock

NOTE:

When reassembling the cock, be careful not to tighten the fastening screws unduly, as the gasket might leave its housing and cause fuel leakage.

ENGINE OIL TANK FILTER CLEANING

WARNING

Securely support the motorcycle so there is no danger of it falling over.

1. Drain:
   - Engine oil
     See section “ENGINE OIL REPLACEMENT”.
2. Remove:
   - Seat
   - Rear cowling
     See section “SEAT, FUEL TANK AND REAR COWLING”.
   - Rear wire harness
   - Exhaust muffler
   - Exhaust pipe
   - Rear shock absorber
     See section “REAR SHOCK ABSORBER” in Chapter 4.
   - Joint air cleaner clamps
   - Rear frame
   - Engine oil tank
3. Loosen:
   - Stay (rear left side cover) fastening screws
4. Remove:
   - Oil tank cap (1)
   - Oil return hose (2)
   - Oil return hose flange (4) fastening screw (3)
   - Oil delivery hose flange (6) fastening screws (5)
   - Oil tank filter (7)
   - OR gaskets (8)
5. Clean:
   - Oil tank filter (with solvent)
   - Oil tank (with solvent)

NOTE:
After cleaning the inside of the oil tank, remove the remaining solvent.

6. Inspect:
   - OR gaskets
     Damaged → Replace.

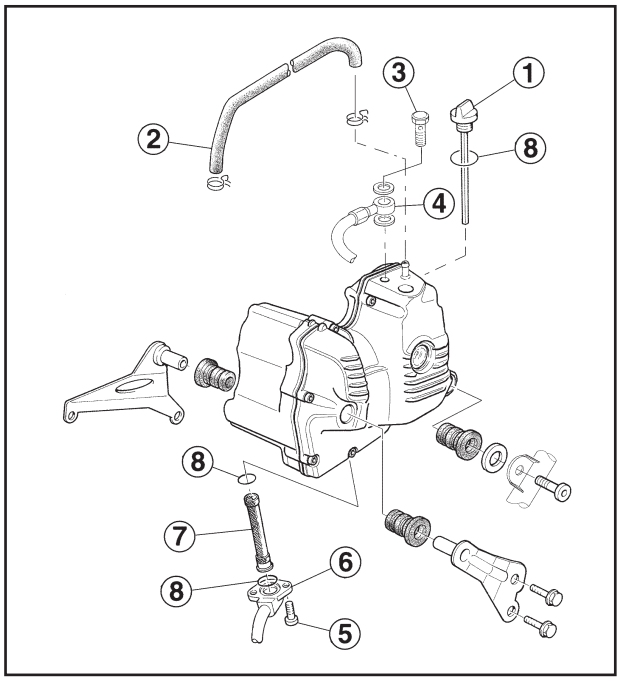

7. Reassemble:
   - OR gaskets
   - Oil tank filter
   - Oil delivery hose flange fastening screws

	Screw (oil delivery hose flange): 10 Nm (1.0 mkg)

   - Oil return hose
   - Oil return hose flange fastening screws

	Screw (oil return hose flange): 35 Nm (3.5 mkg)

8. Tighten:
   - Stay (rear left side cover) fastening screws
9. Reassemble:
   - Engine oil tank
   - Rear frame
   - Joint air cleaner clamps
   - Rear shock absorber
     See section “REAR SHOCK ABSORBER” in Chapter 4.
   - Exhaust pipe
   - Exhaust muffler
   - Rear wire harness
   - Rear cowling
   - Seat
     See section “SEAT, FUEL TANK AND REAR COWLING”.

	Screw (seat): 10 Nm (1.0 mkg)

10. Fill:
    - Engine oil
      See section “ENGINE OIL REPLACEMENT”.
11. Reassemble:
    - Engine tank cap

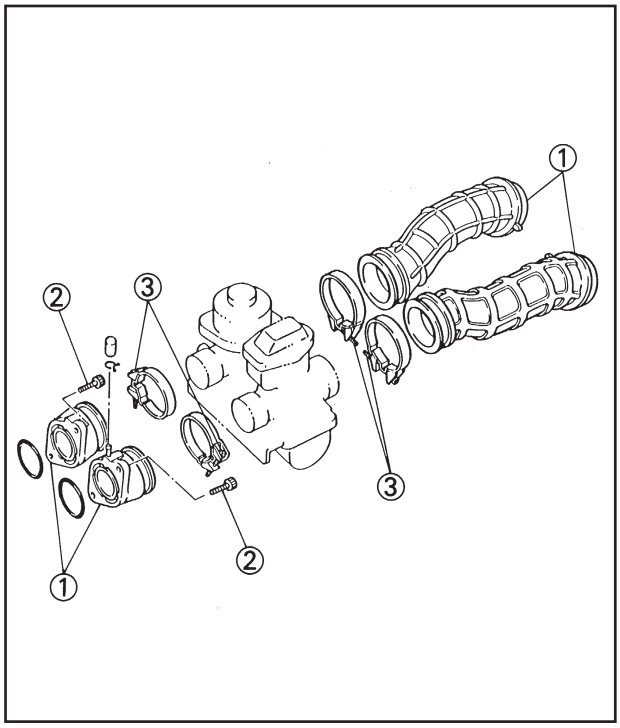

SUCTION HOSE AND MANIFOLD INSPECTION

1. Remove:
   - Seat
   - Fuel tank
     See section “SEAT, FUEL TANK AND REAR COWLING”.
2. Inspect:
   - Suction hoses (1)
     Cracked/damaged → Replace.

	Screw (2) (carburetor manifold): **10 Nm (1.0 mkg)** **Screw (3) (clamp):** **2 Nm (0.2 mkg)**

3. Reassemble:
   - Fuel tank
   - Seat
     See section “SEAT, FUEL TANK AND REAR COWLING”.

	Seat screws: **10 Nm (1.0 mkg)**

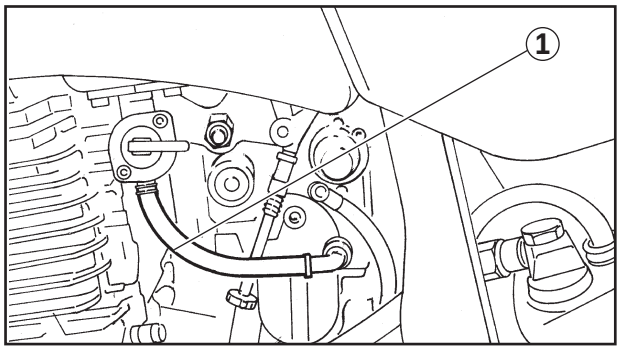

FUEL LINE INSPECTION

1. Inspect:
   - Fuel pipe (1)
     Cracked/Damaged → Replace.

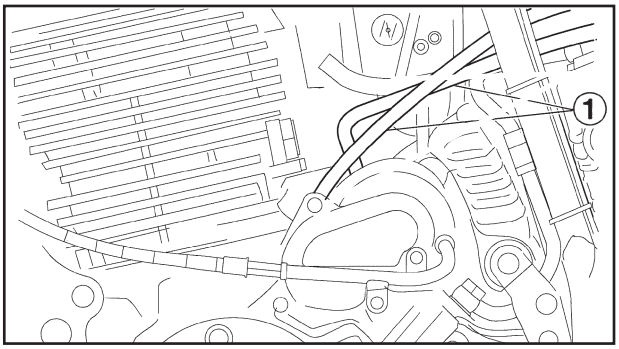

CRANCKCASE VENTILATION HOSE INSPECTION

1. Inspect:
   - Crankcase ventilation hoses (1)
     Cracked/Damaged → Replace.

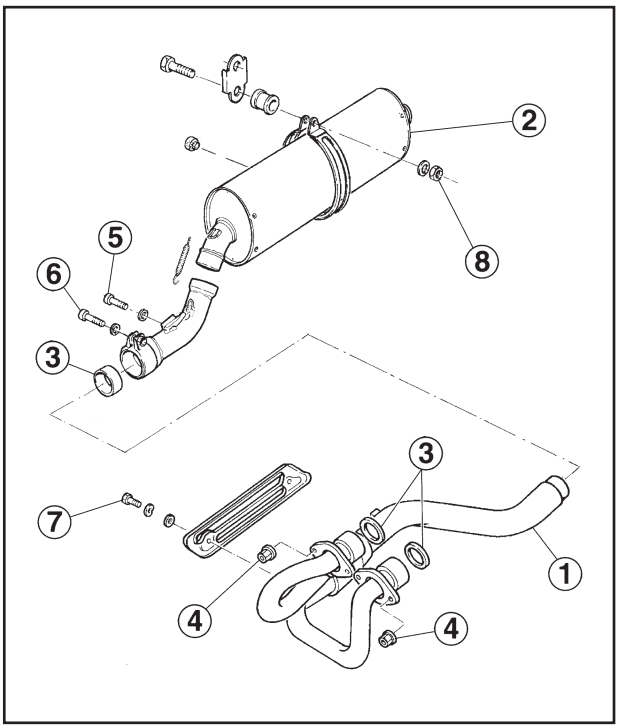

EXHAUST SYSTEM INSPECTION

1. Inspect:
   - Exhaust pipe (1)
   - Muffer (2)
     Cracks/Damage → Replace.
   - Gaskets (3)
     Exhaust gas leakage → Replace.

Nut (4) (exhaust pipe):
10 Nm (1.0 mkg)
Screw (5) (muffler):
23 Nm (2.3 mkg)
Bolt (6) (flange):
23 Nm (2.3 mkg)
(apply molybdenum disulfide grease)
Screw (7) (protection):
7 Nm (0.7 mkg)
Use LOCTITE®.
Nut (8) (muffler):
23 Nm (2.3 mkg)

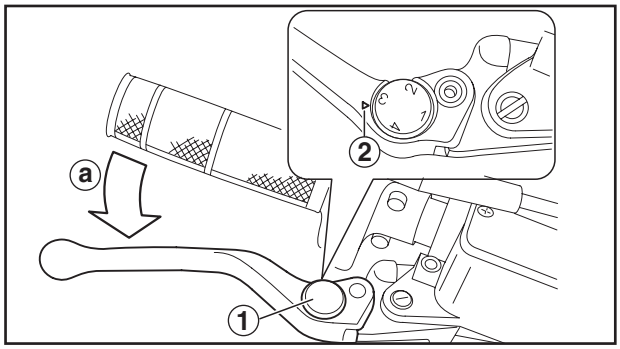

CHASSIS

ADJUSTING THE FRONT BRAKE

1. Adjust:
   - Brake lever position
     (distance ⓐ between the brake lever and the handlebar grip)

▼▼▼▼▼▼▼▼▼▼▼▼▼▼▼▼▼▼▼▼▼▼▼▼▼▼▼▼▼▼▼▼▼▼

a. Turn the adjusting dial ① while holding the lever pushed away from the handlebar grip

NOTE:

Align the setting on the adjusting dial with the arrow mark ②

Posizione n. 1	**La distanza ⓐ è la massima.**
Posizione n. 4	**La distanza ⓐ è la minima.**

WARNING

After adjusting the brake lever position, make sure the pin on the brake lever holder is firmly inserted in the hole in the adjusting dial.

▲▲▲▲▲▲▲▲▲▲▲▲▲▲▲▲▲▲▲▲▲▲▲▲▲▲▲▲▲▲▲▲▲▲

WARNING

A soft or spongy feeling in the brake lever can indicate the presence of air in the brake system. Before the vehicle is operated, the air must be removed by bleeding the brake system. Air in the brake system will considerably reduce braking performance and could result in loss of control and possibly an accident. Therefore, inspect and, if necessary, bleed the brake system. After adjusting the brake lever free play, make sure that there is no brake drag.

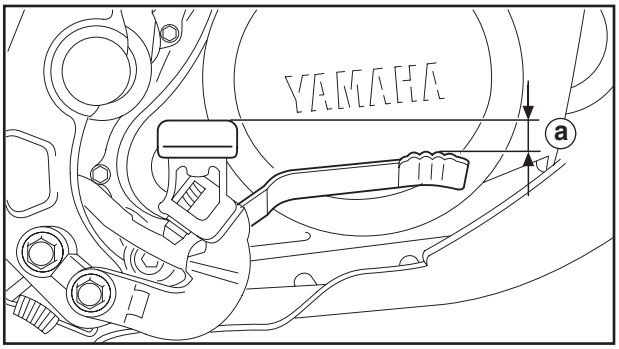

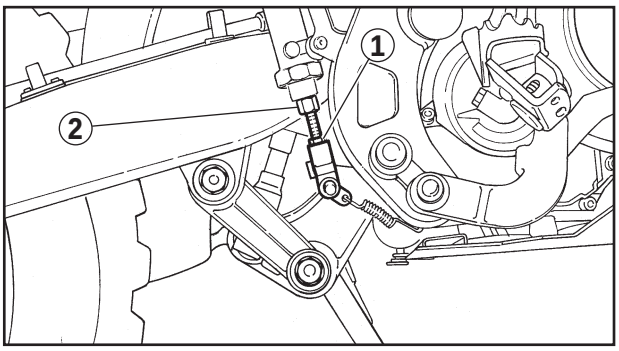

ADJUSTING THE REAR BRAKE

1. Check:
   - Brake pedal position
     (distance ⓐ from the top of the rider footrest to the top of the brake pedal)
     Out of specification → Adjust.

Brake pedal position
(below the top of the rider footrest):
10 mm

2. Adjust:
   - Brake pedal position

▼▼▼▼▼▼▼▼▼▼▼▼▼▼▼▼▼▼▼▼▼▼▼▼▼▼▼▼▼▼▼▼

- Loosen lock nut (1).
- Turn the adjuster (2) either way to obtain the correct pedal height.

Unscrewing	**Height (a) diminishes.**
Screwing	**Height (a) increases.**

- Tighten lock nut.

Lock nut:
20 Nm (2.0 mkg)

CAUTION:

After adjusting the brake pedal position, make sure the brake doesn't oppose resistance.

▲▲▲▲▲▲▲▲▲▲▲▲▲▲▲▲▲▲▲▲▲▲▲▲▲▲▲▲▲▲▲▲

WARNING

If the brake brake pedal has a soft or slack feel, this means that there is air in the brake system. It should be bled away before using the motorcycle. Air in the system seriously affects the effectiveness of braking and may cause loss of control of the motorcycle.

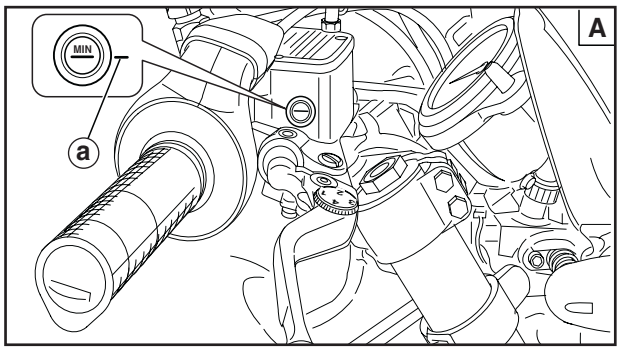

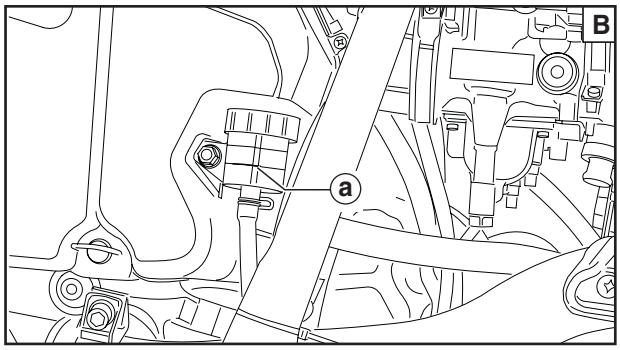

CHECKING THE BRAKE FLUID LEVEL

1. Stand the motorcycle on a level surface.

NOTE:

- Place the motorcycle on a suitable stand.
- Make sure that the motorcycle is upright.

2. Check:
   - Brake fluid level
     Below the minimum level mark ⓐ → Add the recommended brake fluid to the proper level.

Recommended brake fluid:
DOT4

[A] Front brake
[B] Rear brake

WARNING

- **Use only the designated brake fluid. Other brake fluids may cause the rubber seals to deteriorate, causing leakage and poor brake performance.**
- **Refill with the same type of brake fluid that is already in the system. Mixing brake fluids may result in a harmful chemical reaction, leading to poor brake performance.**
- **When refilling, be careful that water does not enter the reservoir. Water will significantly lower the boiling point of the brake fluid and could cause vapor lock.**

CAUTION:

Brake fluid may damage painted surfaces and plastic parts. Therefore, always clean up any spilt brake fluid immediately.

NOTE:

In order to ensure a correct reading of the brake fluid level, make sure that the top of the reservoir is horizontal.

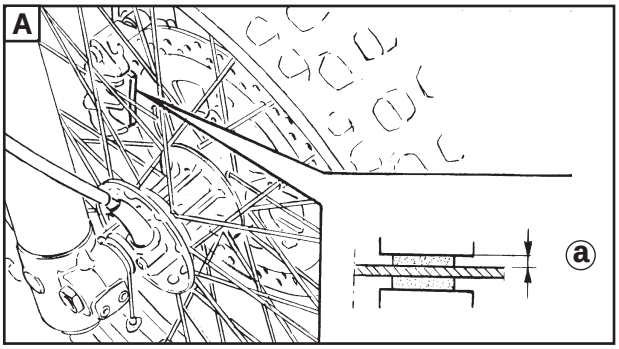

1. Operate the brake lever or brake pedal.
2. Check:
   - Thickness of frictional material
     Out of specification → Replace.

Wear limit (a):
Front: 1.0 mm
Rear: 1.0 mm

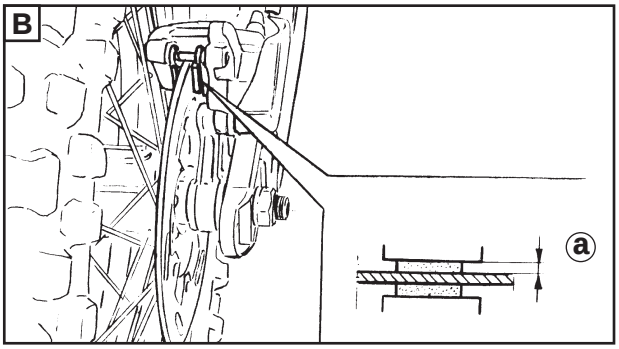

For brake pad replacement, see section "BRAKE PAD REPLACEMENT" in Chapter 4.

[A] Front brake
[B] Rear brake

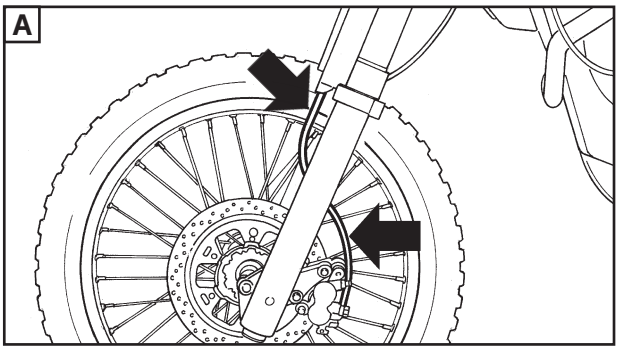

BRAKE HOSING INSPECTION

1. Inspect:
   - Brake hosing
     Cracks/Damage → Replace.
     To replace hosing, see section "FRONT AND REAR BRAKE" in Chapter 4.

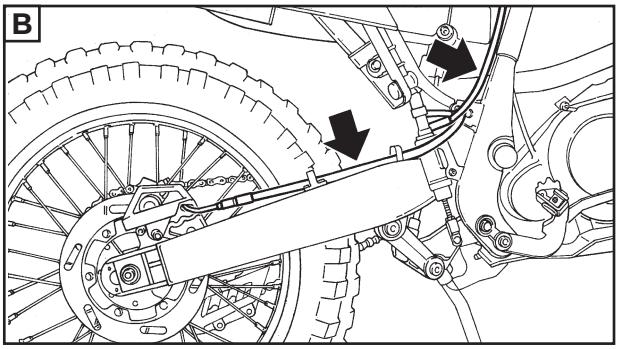

[A] Front brake
[B] Rear brake

BRAKE CIRCUIT BLEEDING

WARNING

If the brake lever or brake pedal has a soft or slack feel, this means that there is air in the brake system. It should be bled away before using the motorcycle. Air in the system seriously affects the effectiveness of braking and may cause loss of control of the motorcycle.
In all cases, bleed the brake system if:

- **The system has been disassembled.**
- **A brake hose has been loosened or removed.**
- **The brake fluid in the tank is at a very low level.**
- **Brake operation is faulty.**

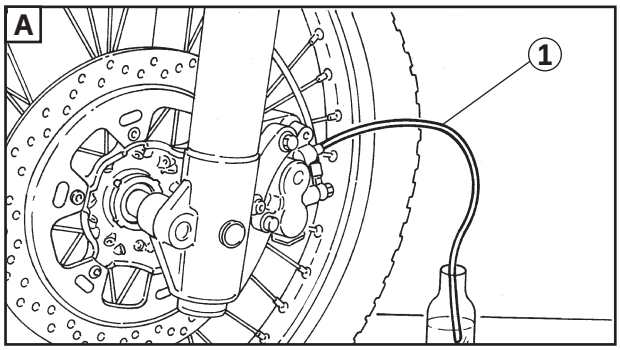

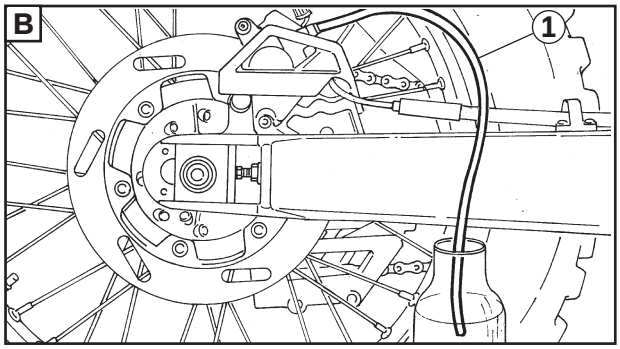

Air bleeding procedures:

a. Top up the level of the fluid in the tank to maximum.
b. Install the diaphragm. Be careful not to spill fluid or let it overflow from the tank.
c. Connect the clear plastic hose (1) to the caliper bleeder screw.
[A] Front
[B] Rear
d. Place the other end of the hose in a container.
e. Slowly pull the brake lever or press the brake pedal several times.
f. Pull the brake lever right in or press the pedal right down and hold in position.
g. Loosen the bleeder screw and allow the lever or pedal to travel slowly towards its limit.
h. Tighten the bleeder screw when the lever or pedal limit has been reached, then release the lever or pedal.

Bleeder screw:
14 Nm (1.4 mkg)

i. Repeat operations (e) to (h) until all the air bubbles have disappeared from the clear plastic hose (1).

NOTE:

If bleeing proves difficult, it may be necessary to allow the brake fluid system to stabilise for a few hours. Repeat the bleeding procedure when the tiny bubbles in the system have disappeared.

j. Top up fluid to the maximum level.

DRIVE CHAIN SLACK INSPECTION AND ADJUSTMENT

Inspecting slack:

NOTE:

Before checking and/or adjusting the chain, rotate the rear wheel through several revolutions and check the slack several times to find the point on the wheel where chain slack is highest.
Check and/or adjust chain slack with rear wheel in this “tight chain” position.

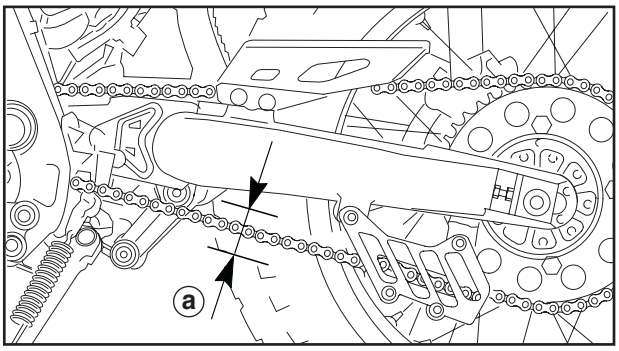

1. Check:
   - Drive chain slack (a)
     Out of specification ➔ Adjust.

Drive chain slack:
30 ~ 40 mm

NOTE:

To check chain slack, the motorcycle must stand in an upright position with its two wheels touching the ground and no one sitting on it. Check slack in the position shown in the figure.

2. Adjust:
   - Drive chain slack

Slack adjustment:

CAUTION:

Too little chain slack will overload the engine and other vital parts. Keep the slack within the specified limits.

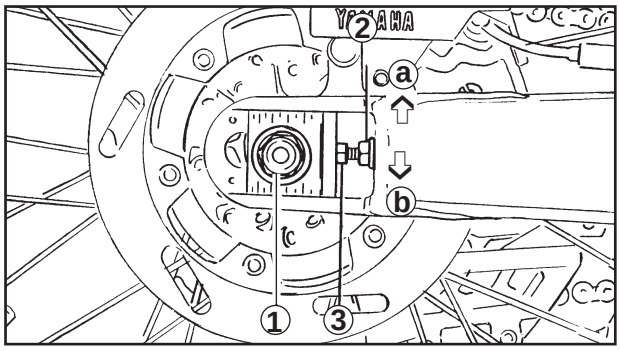

- Loosen the axle nut (1).
- Loosen the locknuts (2) on each side. To tighten the chain, turn the chain adjusting bolts (3) in direction (a). Loosen the locknuts on each side. To loosen the chain, turn the chain adjusting bolts in direction (b) and push the wheel forward.
- After adjusting, tighten the locknuts (2). Then tighten the axle nut (1) to the specified torque.

Rear wheel axle nut:
115 Nm (11.5 mkg)

- Turn each adjusting bolt exactly the same amount to maintain correct axle alignment. There are marks on each side of the swingarm. Use these marks to align the rear wheel.

DRIVE CHAIN LUBRICATION

The chain consists of many parts which work with each other. If the chain is not maintained properly, it will wear out quickly. Therefore, the chain must be serviced regularly. This service is especially necessary when riding in dusty areas. This motorcycle has a drive chain with small rubber O-Rings between the chain plates. Steam cleaning, high-pressure washing and certain solvents can damage these O-Rings. Use only kerosene to clean the drive chain. Wipe it dry, and thoroughly lubricate it with SAE 80 ~ 90W motor oil or special lubricant for O-Ring chains. Do not use any other lubricants on the drive chain. They may contain solvents that could damage the O-Rings.

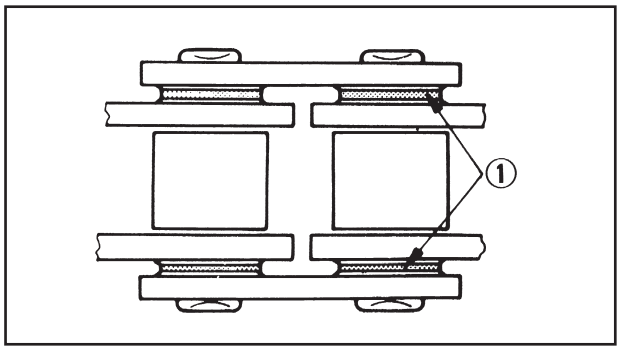

Recommended lubricant:
SAE 80W/90 engine oil or special lubricant for O-Ring chains.

(1) O-Rings

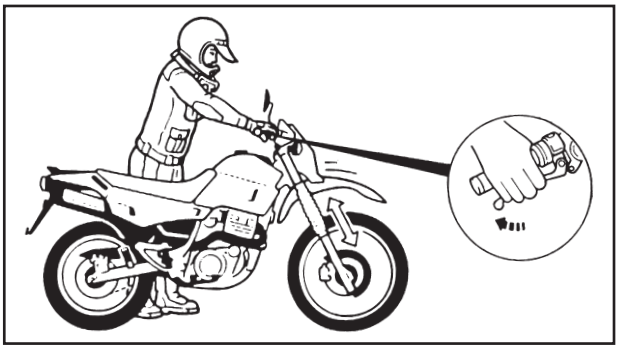

FRONT FORK INSPECTION

WARNING

When inspecting the front fork, hold the motorcycle firmly to prevent it falling over.

1. Place the motorcycle on a level surface.
2. Check:
   - Inner tube
     Scratches/Damage → Replace.
   - Oil seal
     Undue oil leakage → Replace.
3. With the motorcycle in a level upright position operate the front brake.
4. Check:
   - Proper functioning
     Compress and release the front fork several times.
     Irregular/jerky functioning → Repair.
     See section “FRONT FORK” in Chapter 4.

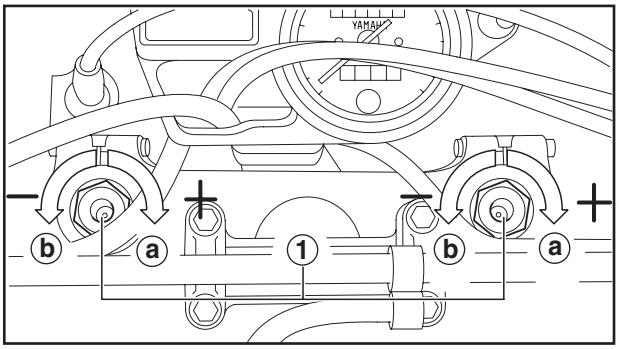

ADJUSTING THE FRONT FORK

This front fork is equipped with spring pre-load adjusting bolts.

WARNING

Always adjust both fork legs equally, otherwise poor handling and loss of stability may result.

Adjust the spring preload as follows.
To increase the spring preload and thereby harden the suspension, turn the adjusting bolt on each fork leg in direction ⓐ. To decrease the spring preload and thereby soften the suspension, turn the adjusting bolt on each fork leg in direction ⓑ.

	Setting
Minimum (soft)	1-2-3
Standard	4
Maximum (hard)	5-6-7-8-9-10

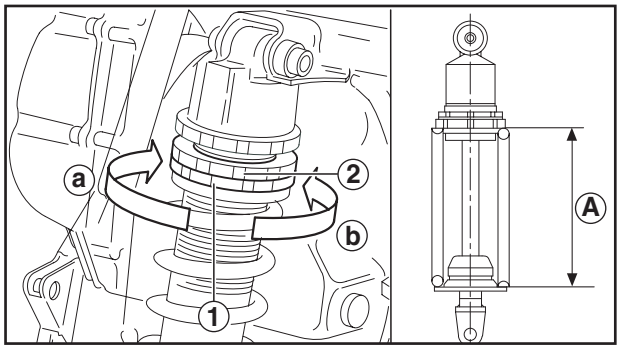

REAR SHOCK ABSORBER ADJUSTMENT

WARNING

This shock absorber contains highly pressurized nitrogen gas. For proper handling, read and understand the following information before handling the shock absorber. The manufacturer cannot be held responsible for property damage or personal injury that may result from improper handling.

- **Do not tamper with or attempt to open the gas cylinder.**
- **Do not subject the shock absorber to an open flame or other high heat sources, otherwise it may explode due to excessive gas pressure.**
- **Do not deform or damage the gas cylinder in any way, as this will result in poor damping performance.**

This shock absorber assembly is equipped with a spring preload adjusting nut.

CAUTION:

Never attempt to turn an adjusting mechanism beyond the maximum or minimum settings.

Adjust the spring preload as follows.

1. Loosen the locknut.
2. To increase the spring preload and thereby harden the suspension, turn the adjusting nut in direction ⓐ. To decrease the spring preload and thereby soften the suspension, turn the adjusting nut in direction ⓑ.

NOTE:

- Use the special wrench included in the owner's tool kit to make the adjustment.
- The spring preload setting is determined by measuring distance A, shown in the illustration. The longer distance A is, the lower the spring preload; the shorter distance A is, the higher the spring preload. With each complete turn of the adjusting nut, distance A changes by 1.5 mm.

Spring preload:
Minimum (soft):
Distance A = 217 mm
Standard:
Distance A = 211 mm
Maximum (hard):
Distance A = 205 mm

2. Tighten the locknut to the specified torque.

Locknut:
45 Nm (4.5 m·kgf)

CAUTION:

Always tighten the locknut against the adjusting nut, and then tighten the locknut to the specified torque.

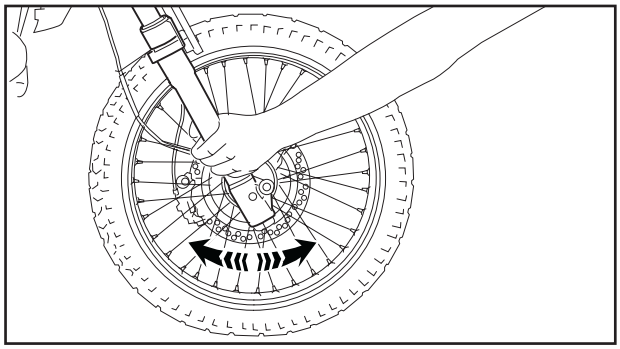

STEERING INSPECTION

WARNING

Hold the motorcycle firmly in place to prevent it falling over.

1. Raise the front wheel and place a support under the engine.
2. Check:
   - Steering bearings
     Grasp the bottoms of the front fork legs and rock back and forward.
     Free play → Adjust steering bearing.
3. Adjust:
   - Steering bearing

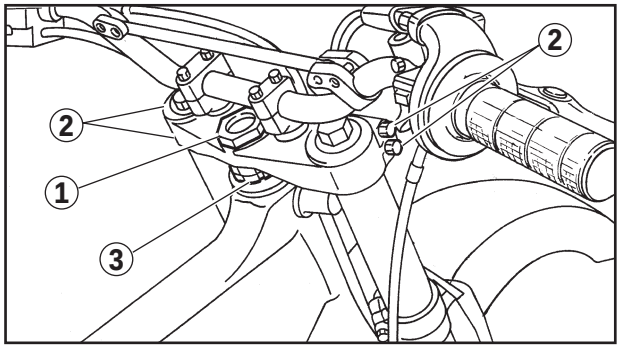

Adjustment:

- Remove the fuel tank.
  See section “SEAT, FUEL TANK AND REAR COWLING”.
- Loosen steering axle nut (1) and fork upper bracket screws (2).
- Tighten the ring nut (3) with the special wrench.

Ringnut wrench:
P/N. 90890-01268
P/N. 90890-01348

NOTE:
The torque wrench and the ringnut wrench should form a right angle.

Ring nut (initial tightening):
38 Nm (3.8 mkg)

- Loosen the ring nut one turn.
- Retighten the ring nut using the special wrench.

WARNING

Do not tighten the ring nut excessively.

Ring nut (final tightening):
4 Nm (0.4 mkg)

- Tighten the steering axle nut and the front fork bracket screws.

Nut (steering axle):
115 Nm (11.5 mkg)
Screws (front fork bracket):
28 Nm (2.8 mkg)

- Reassemble the fuel tank.
  See section “SEAT, FUEL TANK AND REAR COWLING”.

NOTE:
Check the steering head for looseness or binding by turning it all the way in both directions. If it binds, remove the steering axle assembly and inspect the steering bearings.
Refer to “STEERING HEAD” in Chapter 6.

▲▲▲▲▲▲▲▲▲▲▲▲▲▲▲▲▲▲▲▲▲▲▲▲▲▲▲▲▲▲

TYRE INSPECTION

WARNING

- **Tyre pressure must be checked when the tyres are at ambient temperature. Pressure must be adjusted according to the total weight of luggage, driver, passenger and accessories (fairings, bags, if approved for this model) and speed of the motorcycle.**
- **A list of tyres approved for this model following severe testing by Yamaha is provided. There can be no guarantee of safe road-holding if a combination of tyres different from those indicated is used.**
- **Front and rear tyres must have the same design and be of the same make.**
- **The use of valves and valve stems other than those indicated might cause the loss of tyre pressure at high speeds. Use only original or compatible spare parts.**
- **Replace the valve cap securely to prevent losses of tyre pressure at high speed.**

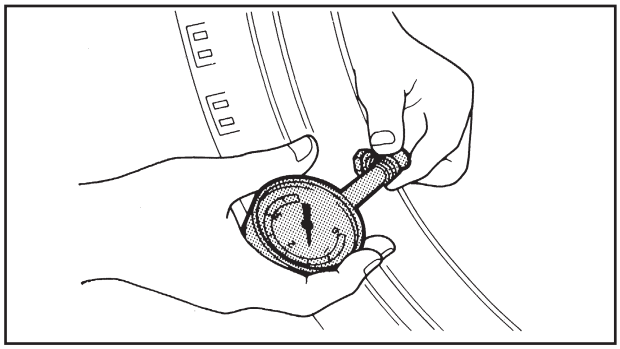

1. Check:
   - Tyre pressure
     Out of specification → Adjust.

Tire air pressure (measured on cold tires)		
Load*	Front	Rear
Up to 90 kg	200 kPa (2.00 kgf/cm², 2.00 bar)	220 kPa (2.20 kgf/cm², 2.20 bar)
90 kg-maximum	210 kPa (2.10 kgf/cm², 2.10 bar)	240 kPa (2.40 kgf/cm², 2.40 bar)
Off-road riding	150 kPa (1.50 kgf/cm², 1.50 bar)	160 kPa (1.60 kgf/cm², 1.60 bar)
High-speed riding	210 kPa (2.10 kgf/cm², 2.10 bar)	240 kPa (2.40 kgf/cm² 2.40 bar)

Maximum load*	180 kg

* Total weight of rider, passenger, cargo and accessories.

2. Adjust:
   - Air pressure

▼▼▼▼▼▼▼▼▼▼▼▼▼▼▼▼▼▼▼▼▼▼▼▼▼▼▼▼▼▼▼▼

Adjustment:

- Remove the valve cap.

Use an air pump or compressed air pistol.	**Increase air pressure**
Eliminate air by pressing valve tube stem	**Air pressure diminishes**

- Install valve caps securely.

▲▲▲▲▲▲▲▲▲▲▲▲▲▲▲▲▲▲▲▲▲▲▲▲▲▲▲▲▲▲▲▲

3. Inspect:
   - Tyre surface
     Wear/Damage → Replace.

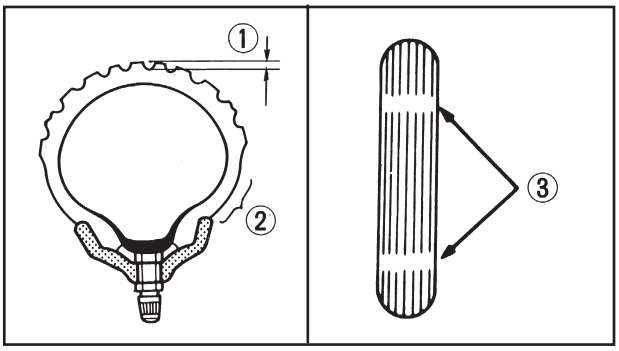

Minimum track thickness:
(front and rear)
1,6 mm

NOTE:
These limits may be different by regulation from country to country. If so, conform to the limits specified by the regulations of your own country.

(1) Track thickness
(2) Side
(3) Wear indicators

WARNING

The use of worn tyres reduces stability and may cause a loss of control.
It is not advisable to repair a punctured air tube. If absolutely necessary, repair with the utmost care and replace the tube as quickly as possible with another with the same characteristics.

4. Tighten:
   - Valve stem lock nut

Lock nut (valve stem)
1.5 Nm (0.15 kgm)

FRONT:

Manufacture	Size	Type
PIRELLI	90/90-21 54R	MT70
MICHELIN	90/90-21 54S	T63

REAR:

Manufacture	Size	Type
PIRELLI	130/80-18 66R	MT70
MICHELIN	130/80-18 66S	T63

WARNING

After assembling the new tyres, drive slowly to allow them to adapt well to the rim and yjus ensure maximum holding.

WHEEL INSPECTION

1. Inspect:
   - Wheels
     Damage/Deformation → Replace.

NOTE:
Always balance the wheel after the replacement or reassembly of a tyre or rim.

WARNING

Never try to repair a rim in any way.

Bearing inspection
Check the front and rear wheel bearings periodically to make sure that they do not have free play in the hub and that the wheel turns smoothly without sticking. Wheel bearings must always be checked in accordance with the maintenance table.

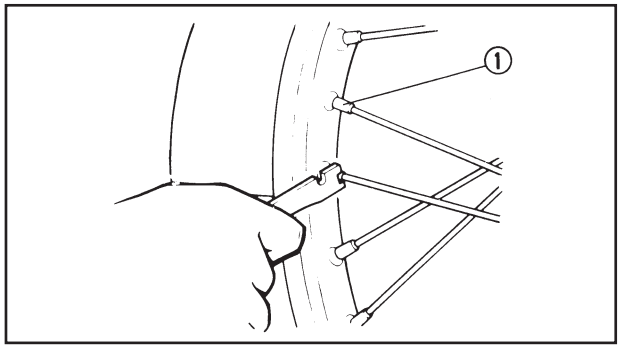

SPOKE INSPECTION AND TIGHTENING

1. Inspect:
   - Spokes (1)
     Curvature/Damaged → Replace.
     Loose spoke → Tighten.
2. Tighten:
   - Spoke (s)

NOTE:
Tighten the spokes before and after the break-in period.

	Spoke: **3 Nm (0.3 mkg)**

CABLE INSPECTION

WARNING

If the cable sheath is damaged, corrosion might ensue or the cable might not run freely. To avoid such drawbacks, replaced damaged cables as quickly as possible.

1. Inspect:
   - Cable sheath
     Damaged → Replace the cable assembly.
2. Check:
   - Cable functioning
     Does not run freely → Replace the cable assembly.

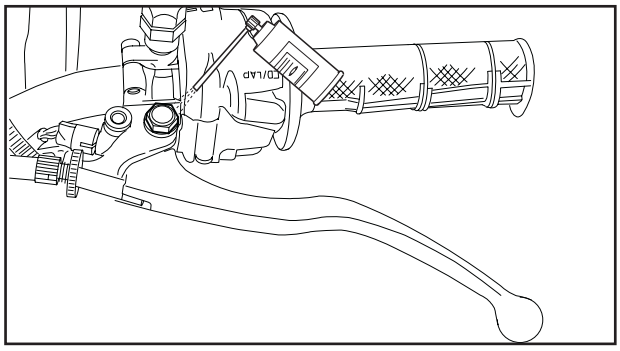

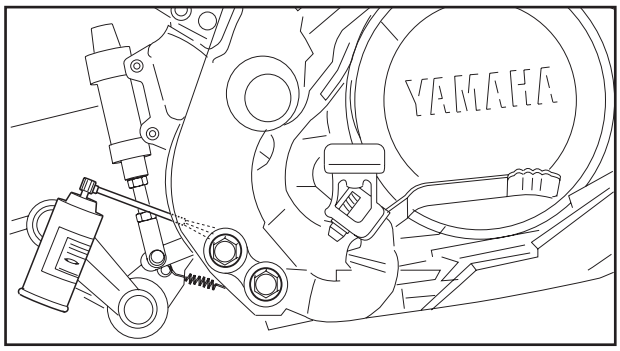

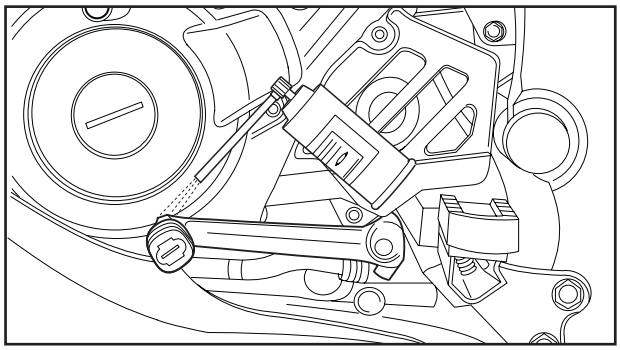

LEVER AND PEDAL LUBRICATION

1. Lubricate the pivoting parts:
   - Clutch lever
   - Front brake lever
   - Rear brake pedal
   - Shift pedal

Recommended lubricant:
SAE 10W30 motor oil

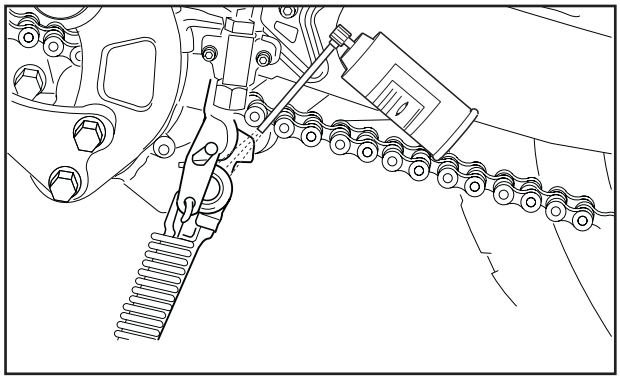

SIDESTAND LUBRICATION

Lubricate the sidestand pivoting and mating parts. Check to see that the sidestand moves up and down smoothly.

Recommended lubricant:
SAE 10W30 motor oil

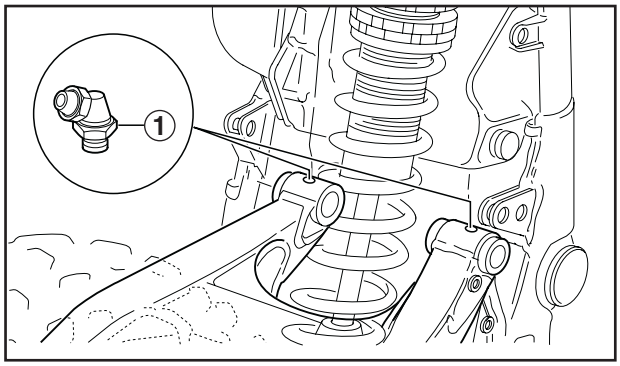

REAR SUSPENSION LUBRICATION

Lubricate the pivoting parts.

Recommended lubricant:
Molybdenum disulfide grease

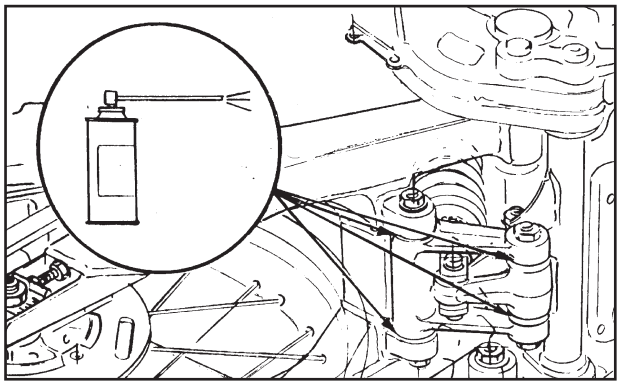

ELECTRICAL SYSTEM
CHECKING AND CHARGING THE BATTERY

WARNING

Batteries generate explosive hydrogen gas and contain electrolyte which is made of poisonous and highly caustic sulfuric acid. Therefore, always follow these preventive measures:

- **Wear protective eye gear when handling or working near batteries.**
- **Charge batteries in a well-ventilated area.**
- **Keep batteries away from fire, sparks or open flames (e.g., welding equipment, lighted cigarettes).**
- **DO NOT SMOKE when charging or handling batteries.**
- **KEEP BATTERIES AND ELECTROLYTE OUT OF REACH OF CHILDREN.**
- **Avoid bodily contact with electrolyte as it can cause severe burns or permanent eye injury.**

First aid in case of bodily contact:

External

- **SKIN – Wash with water.**
- **EYES – Flush with water for 15 minutes and get immediate medical attention.**

Internal

Drink large quantities of water or milk followed with milk of magnesia, beaten egg or vegetable oil. Get immediate medical attention.

CAUTION:

- **This is a sealed battery. Never remove the sealing caps because the balance between cells will not be maintained and battery performance will deteriorate.**
- **Charging time, charging amperage and charging voltage for a MF battery are different from those of conventional batteries. The MF battery should be charged as explained in the charging method illustrations. If the battery is overcharged, the electrolyte level will drop considerably. Therefore, take special care when charging the battery.**

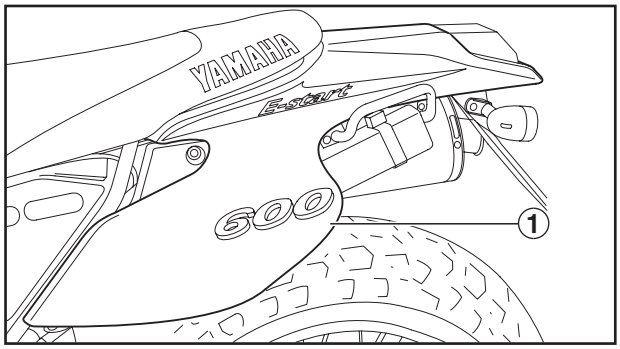

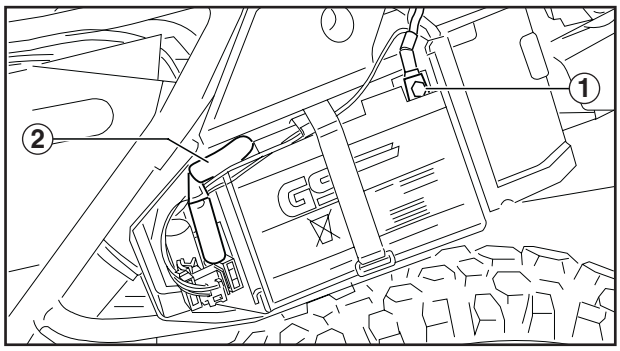

NOTE:

Since MF batteries are sealed, it is not possible to check the charge state of the battery by measuring the specific gravity of the electrolyte. Therefore, the charge of the battery has to be checked by measuring the voltage at the battery terminals.

1. Remove:
   - Seat
   - Panel ①
2. Disconnect:
   - Battery leads
     (from the battery terminals)

CAUTION:

First, disconnect the negative lead ①, then the positive lead ②.

3. Remove:
   - Battery
4. Check:
   - Battery charge

▼▼▼▼▼▼▼▼▼▼▼▼▼▼▼▼▼▼▼▼▼▼▼▼▼▼▼▼▼▼▼▼

a. Connect a pocket tester to the battery terminals.

Tester positive lead →	**Battery positive terminal**
Tester negative lead →	**Battery negative terminal**

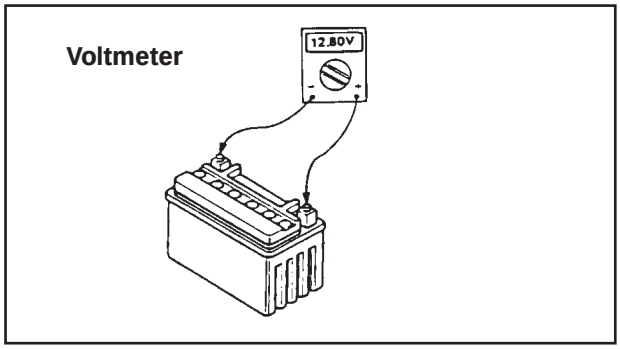

NOTE:

- The charge state of a MF battery can be checked by measuring its open-circuit voltage (i.e., the voltage when the positive terminal is disconnected).
- No charging is necessary when the open-circuit voltage equals or exceeds 12.8 V.

b. Check the charge of the battery, as shown in the charts and the following example.

Example

c. Open-circuit voltage = 12.0 V
d. Charging time = 6.5 hours
e. Charge of the battery = 20 ~ 30 %

▲▲▲▲▲▲▲▲▲▲▲▲▲▲▲▲▲▲▲▲▲▲▲▲▲▲▲▲▲▲▲▲

5. Charge:
   - Battery
     (refer to the appropriate charging method illustration)

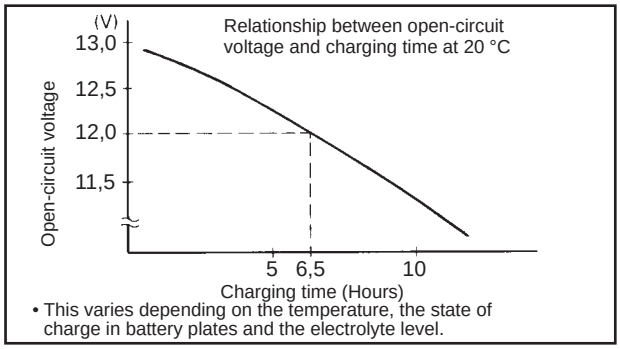

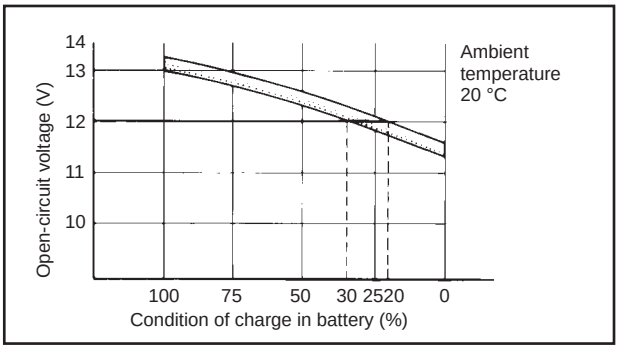

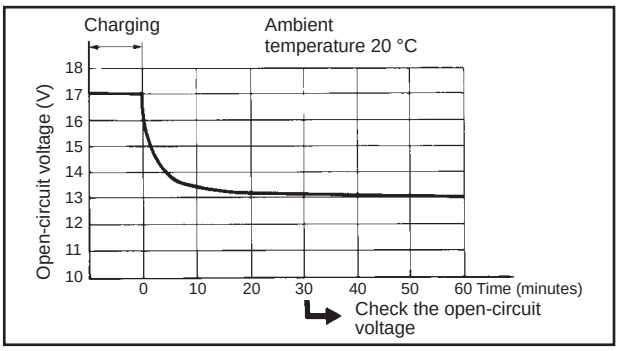

WARNING

Do not quick charge a battery.

CAUTION:

- **Never remove the MF battery sealing caps.**
- **Do not use a high-rate battery charger. They force a high-amperage current into the battery quickly and can cause battery overheating and battery plate damage.**
- **If it is impossible to regulate the charging current on the battery charger, be careful not to overcharge the battery.**
- **When charging a battery, be sure to remove it from the motorcycle (if charging has to be done with the battery mounted on the motorcycle, disconnect the negative lead from the battery terminal).**
- **To reduce the chance of sparks, do not plug in the battery charger until the battery charger leads are connected to the battery.**
- **Before removing the battery charger lead clips from the battery terminals, be sure to turn off the battery charger.**
- **Make sure that the battery charger lead clips are in full contact with the battery terminal and that they are not shorted. A corroded battery charger lead clip may generate heat in the contact area and a weak clip spring may cause sparks.**
- **If the battery becomes hot to the touch at any time during the charging process, disconnect the battery charger and let the battery cool before reconnecting it. Hot batteries can explode!**
- **As shown in the following illustration, the open-circuit voltage of a MF battery stabilizes about 30 minutes after charging has been completed. Therefore, wait 30 minutes after charging is completed before measuring the open-circuit voltage.**

Charging method using a variable-current (voltage) type charger

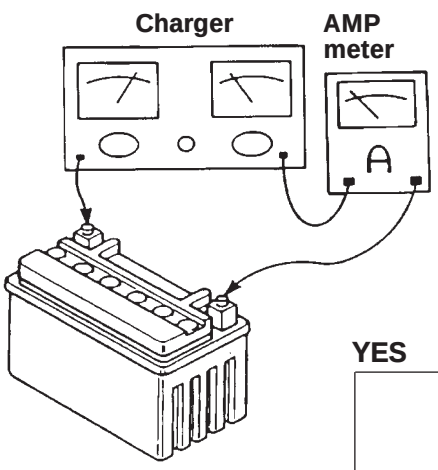

Measure the open-circuit voltage prior to charging.

NOTE:
Voltage should be measured 30 minutes after the machine is stopped.

Connect a charger and AMP meter to the battery and start charging.

NOTE:
Set the charging voltage at 16 ~ 17 V (if the setting is lower, charging will be insufficient. If too high, the battery will be over-charged.)

Make sure the current is higher than the standard charging current written on the battery.

YES → Adjust the voltage so that current is at standard charging level.

NO → By turning the charging voltage adjust dial, set the charging voltage at 20 ~ 25 V.

Monitor the amperage for 3 ~ 5 minutes to check if the standard charging current is reached.

YES → Adjust the voltage so that current is at standard charging level.

NO → If the current does not exceed standard charging current after 5 minutes, replace the battery.

Set the timer according to the charging time suitable for the open-circuit voltage.
Refer to "Battery condition checking steps."

In case that charging requires more than 5 hours, it is advisable to check the charging current after a lapse of 5 hours.
If there is any charge in the amperage, readjust the voltage to obtain the standard charging current.

Measure the battery open-circuit voltage after having left the battery unused for more than 30 minutes.
12.8 V or more --- Charging is complete.
12.7 V or less --- Recharging is required.
Under 12.0 V --- Replace the battery.

Charging method using a constant-voltage type charger

Measure the open-circuit voltage prior to charging.

NOTE:
Voltage should be measured 30 minutes after the machine is stopped.

↓

Connect a charger and AMP meter to the battery and start charging.

↓

Make sure the current is higher than the standard charging current written on the battery.

YES → Charge the battery until the battery's charging voltage is 15 V.

NOTE:
Set the charging time at 20 hours (maximum).

↓

Measure the battery open-circuit voltage after having left the battery unused for more than 30 minutes.
12.8 V or more --- Charging is complete.
12.7 V or less --- Recharging is required.
Under 12.0 V --- Replace the battery.

NO → This type of battery charger cannot charge the MF battery. A variable volt-

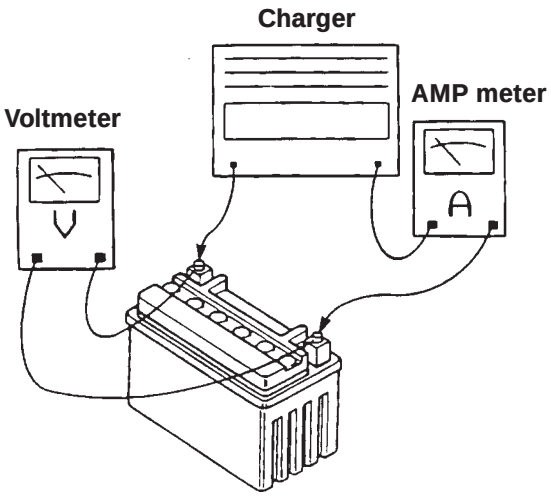

Charging method using a constant-current type charger

This type of battery charger cannot charge the MF battery.

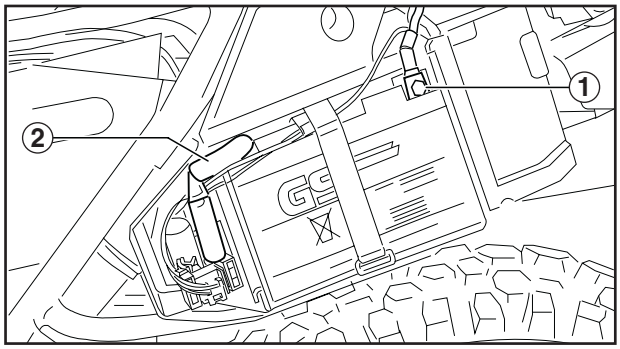

6. Connect:
   - Battery leads
     (to the battery terminals)

CAUTION:

First, connect the positive lead ②, then the negative lead ①.

7. Check:
   - Battery terminals
     Dirt → Clean with a wire brush.
     Loose connection → Connect properly.
8. Lubricate:
   - Battery terminals

	Recommended lubricant **Dielectric grease**

9. Install:
   - Panel
   - Seat

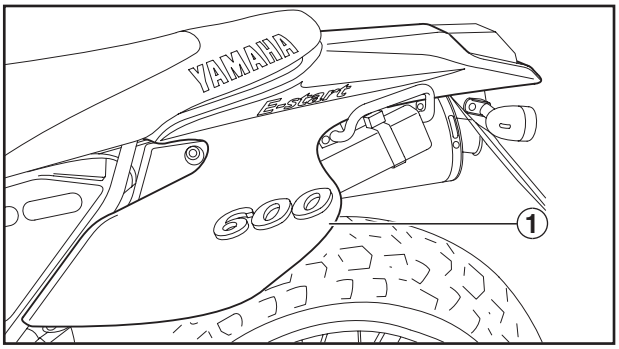

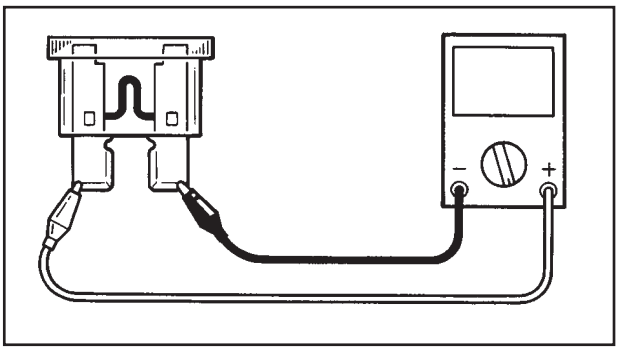

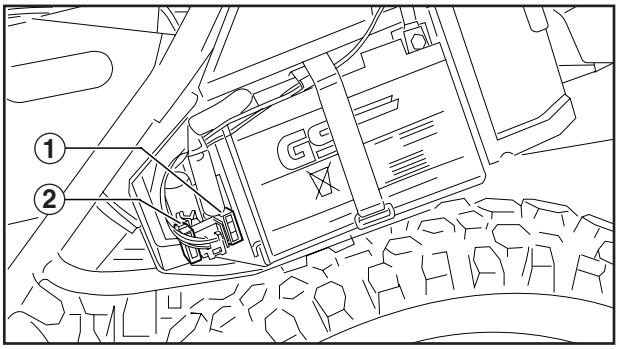

CHECKING THE FUSES

CAUTION:

To avoid a short circuit, always turn the main switch to "OFF" when checking or replacing a fuse.

1. Remove:
   - Seat
   - Panel ①
2. Check:
   - Fuse

▼▼▼▼▼▼▼▼▼▼▼▼▼▼▼▼▼▼▼▼▼▼▼▼▼▼▼▼▼▼▼▼

a. Connect the pocket tester to the fuse and check it for continuity.

NOTE:

Set the pocket tester selector to “Ω × 1”.

	Pocket tester **90890-03112**

b. If the pocket tester indicates "∞", replace the fuse.

▲▲▲▲▲▲▲▲▲▲▲▲▲▲▲▲▲▲▲▲▲▲▲▲▲▲▲▲▲▲▲▲

3. Replace:
   - Blown fuse

▼▼▼▼▼▼▼▼▼▼▼▼▼▼▼▼▼▼▼▼▼▼▼▼▼▼▼▼▼▼▼▼

a. Turn off the ignition.
b. Install a new fuse of the correct amperage rating.
c. Turn on the switches to verify if the electrical circuit is operational.
d. If the fuse immediately blows again, check the electrical circuit.

▲▲▲▲▲▲▲▲▲▲▲▲▲▲▲▲▲▲▲▲▲▲▲▲▲▲▲▲▲▲▲▲

Fuses	Amperage rating	Quantity
Main (1)	20 A	1
Reserve (2)	20 A	1

WARNING

Never use a fuse with an amperage rating other than that specified. Improvising or using a fuse with the wrong amperage rating may cause extensive damage to the electrical system, cause the lighting and ignition systems to malfunction and could possibly cause a fire.

4. Install:
   - Pannel
   - Seat

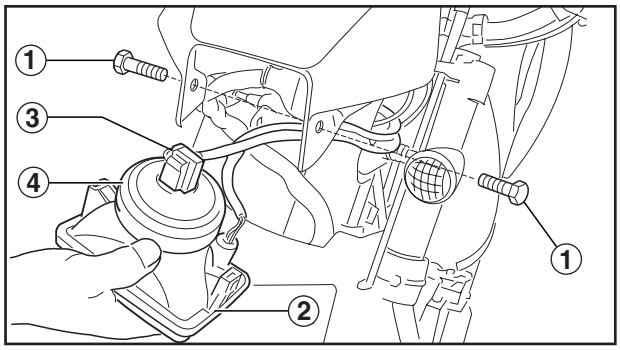

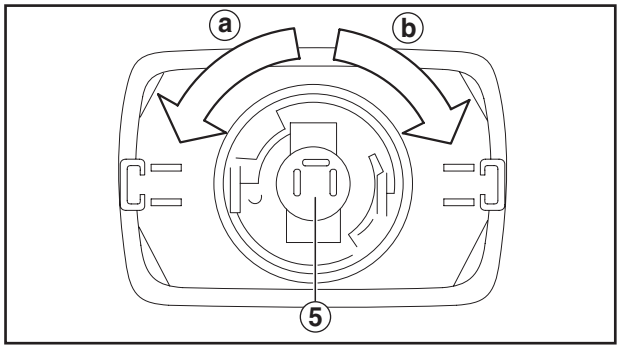

REPLACING THE HEADLIGHT BULBS

Low beam/high beam

1. Remove:
   - Cowling screws (1)
2. Remove:
   - Cowling (from the meter bracket)

NOTE:

Remove the cowling from the meter bracket by lowering it to disengage it, and then lifting it up.

3. Remove:
   - Headlight (2)
4. Disconnect:
   - Headlight coupler (3)
5. Remove:
   - Headlight bulb cover (4)
6. Remove:
   - Headlight bulb holder (5) (by turning it counterclockwise (a))
   - Headlight bulb

WARNING

Headlight bulbs get very hot. Therefore, keep flammable products away from a lit headlight bulb, and do not touch the bulb until it has cooled down.

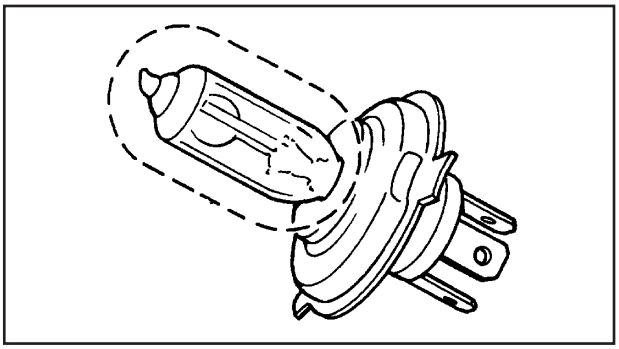

7. Install:
   - Headlight bulb (new)
   - Headlight bulb holder (by turning it clockwise (b))

CAUTION:

Do not touch the glass part of the headlight bulb to keep it free from oil, otherwise the transparency of the glass, the luminosity of the bulb, and the bulb life will be adversely affected. Thoroughly clean off any dirt and fingerprints on the headlight bulb using a cloth moistened with alcohol or thinner.

8. Install:
   - Headlight bulb cover
9. Connect:
   - Headlight coupler
10. Install:
    - Upper side of the cowling (onto the meter bracket)
    - Headlight (adjust the headlight beam if necessary)
11. Install:
    - Cowling screws

Cowling screws:
10 Nm (1.0 kgm)

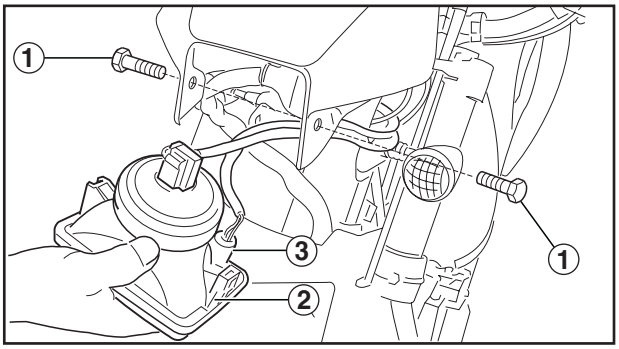

Auxiliary light bulb

1. Remove:
   - Cowling screws (1)
2. Remove:
   - Cowling (from the meter bracket)

NOTE:
Remove the cowling from the meter bracket by lowering it to disengage it, and then lifting it up.

3. Remove:
   - Headlight (2)
   - Auxiliary light socket (3)

NOTE:
Remove the auxiliary light socket (together with the bulb) without disconnecting the leads.

- Bulb (by pushing it in and turning it counterclockwise)

4. Install:
   - Bulb (new) (by pushing it in and turning it clockwise)
   - Bulb holder
   - Upper side of the cowling (onto the meter bracket)
   - Headlight (adjust the headlight beam if necessary)
5. Install:
   - Cowling screws

Cowling screws:
10 Nm (1.0 kgm)

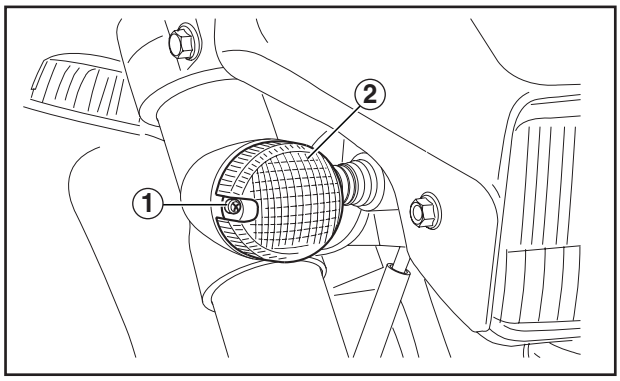

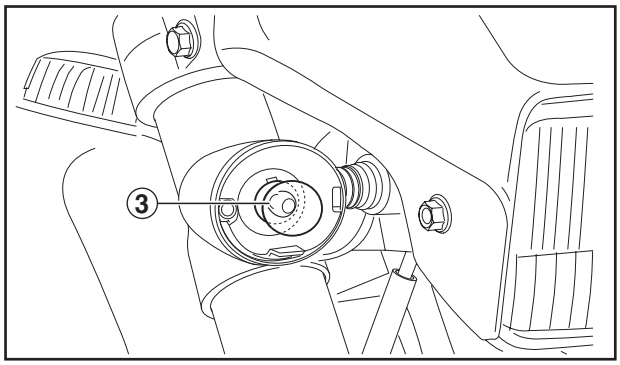

REPLACING THE TURN INDICATOR LIGHT BULB

1. Remove:
   - Lens screw (1)
   - Lens (2)
   - Bulb (3)

NOTE:
To remove the bulb press it into place and turn it counterclockwise.

2. Install:
   - New bulb

NOTE:
To install the bulb press it into place and turn it clockwise.

   - Lens
   - Lens screw

CAUTION:
Do not overtighten the screw, otherwise the lens may break.

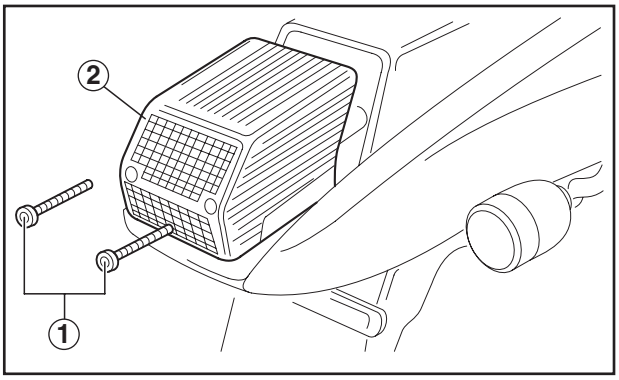

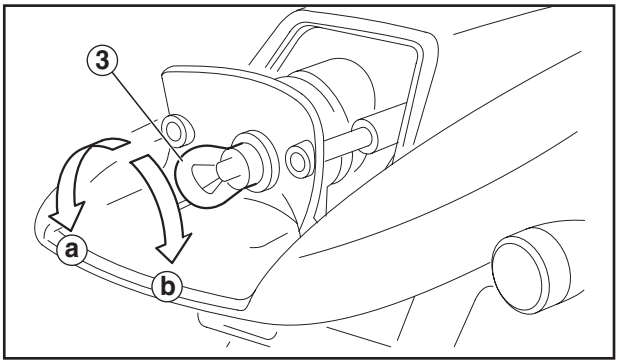

REPLACING THE TAIL/BRAKE LIGHT BULB

1. Remove:
   - Screws (1) (lens fixing)
   - Lens (2)
   - Bulb (3)

NOTE:
To remove the bulb press it into place and turn it counterclockwise (a).

2. Install:
   - New bulb

NOTE:
To install the bulb press it into place and turn it clockwise (b).

   - Lens
   - Screws (lens fixing)

CAUTION:
Do not overtighten the screws, otherwise the lens may break.

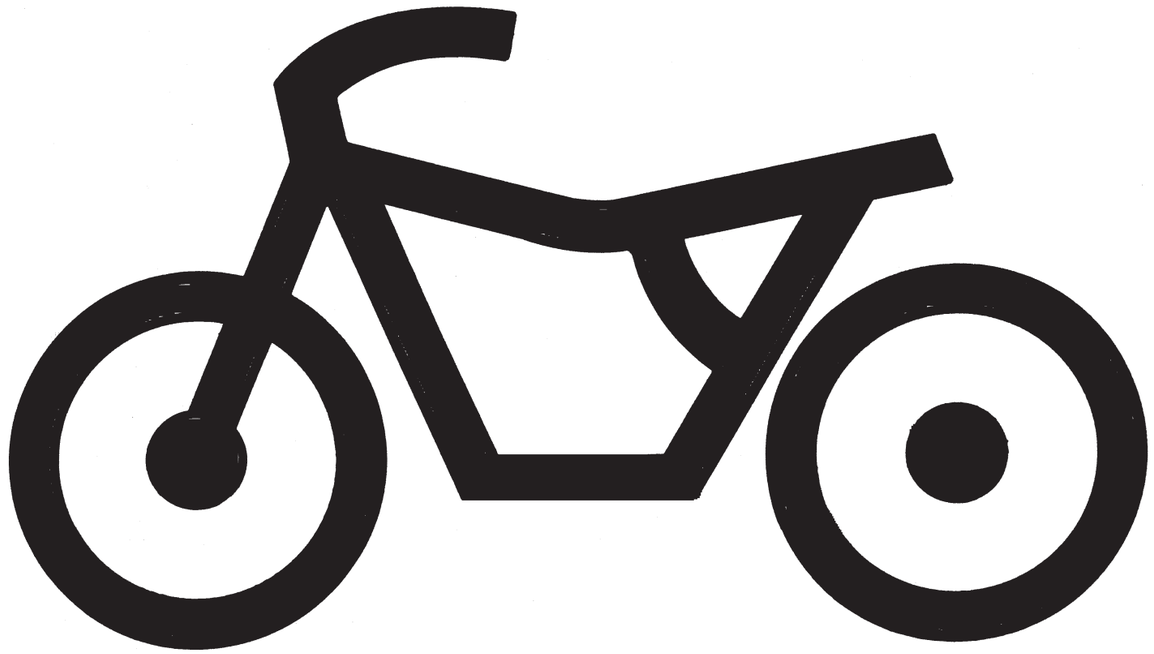

CHAS 4

CHAPTER 4.
CHASSIS

FRONT WHEEL AND BRAKE DISC 4-1
FRONT WHEEL AND BRAKE DISC REMOVAL 4-1
FRONT WHEEL DISASSEMBLY 4-3
FRONT WHEEL INSPECTION 4-3
BRAKE DISC INSPECTION 4-5
FRONT WHEEL ASSEMBLY 4-5
FRONT WHEEL INSTALLATION 4-6
WHEEL STATIC BALANCE ADJUSTMENT 4-6

FRONT BRAKE 4-8
BRAKE PAD REMOVAL 4-8
BRAKE PAD REPLACEMENT 4-9
MASTER CYLINDER 4-11
MASTER CYLINDER INSPECTION 4-13
MASTER CYLINDER ASSEMBLY 4-13
MASTER CYLINDER INSTALLATION 4-14
BRAKE CALIPER 4-16
BRAKE CALIPER DISASSEMBLY 4-18
CALIPER INSPECTION 4-18
CALIPER ASSEMBLY 4-19
CALIPER INSTALLATION 4-19

REAR WHEEL AND BRAKE DISC 4-21
REAR WHEEL AND BRAKE DISC REMOVAL 4-21
REAR WHEEL DISASSEMBLY 4-23
REAR WHEEL INSPECTION 4-23
BRAKE DISC INSPECTION 4-24
REAR WHEEL ASSEMBLY 4-25
REAR WHEEL INSTALLATION 4-25
WHEEL STATIC BALANCE ADJUSTMENT 4-27

REAR BRAKE. 4-29
BRAKE PAD REMOVAL 4-29
BRAKE PAD REPLACEMENT 4-30
MASTER CYLINDER 4-32
MASTER CYLINDER INSPECTION 4-33
MASTER CYLINDER ASSEMBLY 4-33
MASTER CYLINDER INSTALLATION 4-34
BRAKE PEDAL REMOVAL 4-35
BRAKE CALIPER 4-36
BRAKE CALIPER DISASSEMBLY 4-38
CALIPER INSPECTION 4-38
CALIPER ASSEMBLY 4-39
CALIPER INSTALLATION 4-39

FRONT FORK 4-42
FRONT FORK REMOVAL 4-42
FRONT FORK DISASSEMBLY 4-43
FRONT FORK REMOVAL 4-45
OIL REPLACEMENT 4-46
CLEANING THE DUST SEAL 4-49
SEAL AND BUSH REPLACEMENT 4-50
OIL LEAKAGE FROM DUST SEAL 4-56
ANOMALOUS HYDRAULIC BRAKING 4-56
FRONT FORK INSPECTION 4-57
FRONT FORK INSTALLATION 4-59
FRONT FORK ADJUSTMENT 4-60

STEERING 4-61
STEERING REMOVAL 4-64
STEERING INSPECTION 4-65
STEERING INSTALLATION 4-65

REAR SHOCK ABSORBER 4-69
NOTE ON DISPOSAL 4-72
SHOCK ABSORBER REMOVAL 4-73
SHOCK ABSORBER INSPECTION 4-74
SHOCK ABSORBER ADJUSTMENT 4-74

SWINGARM 4-76
SWINGARM REMOVAL 4-77
SWINGARM INSPECTION 4-78
LATERAL FREE PLAY ADJUSTMENT 4-79
SWINGARM INSTALLATION 4-80

DRIVE CHAIN, DRIVE SPROCKET AND REAR WHEEL SPROCKET 4-82
DRIVE CHAIN REMOVAL 4-82
DRIVE CHAIN INSPECTION 4-83
DRIVE CHAIN INSTALLATION 4-85

CHASSIS - FRONT WHEEL AND BRAKE DISC

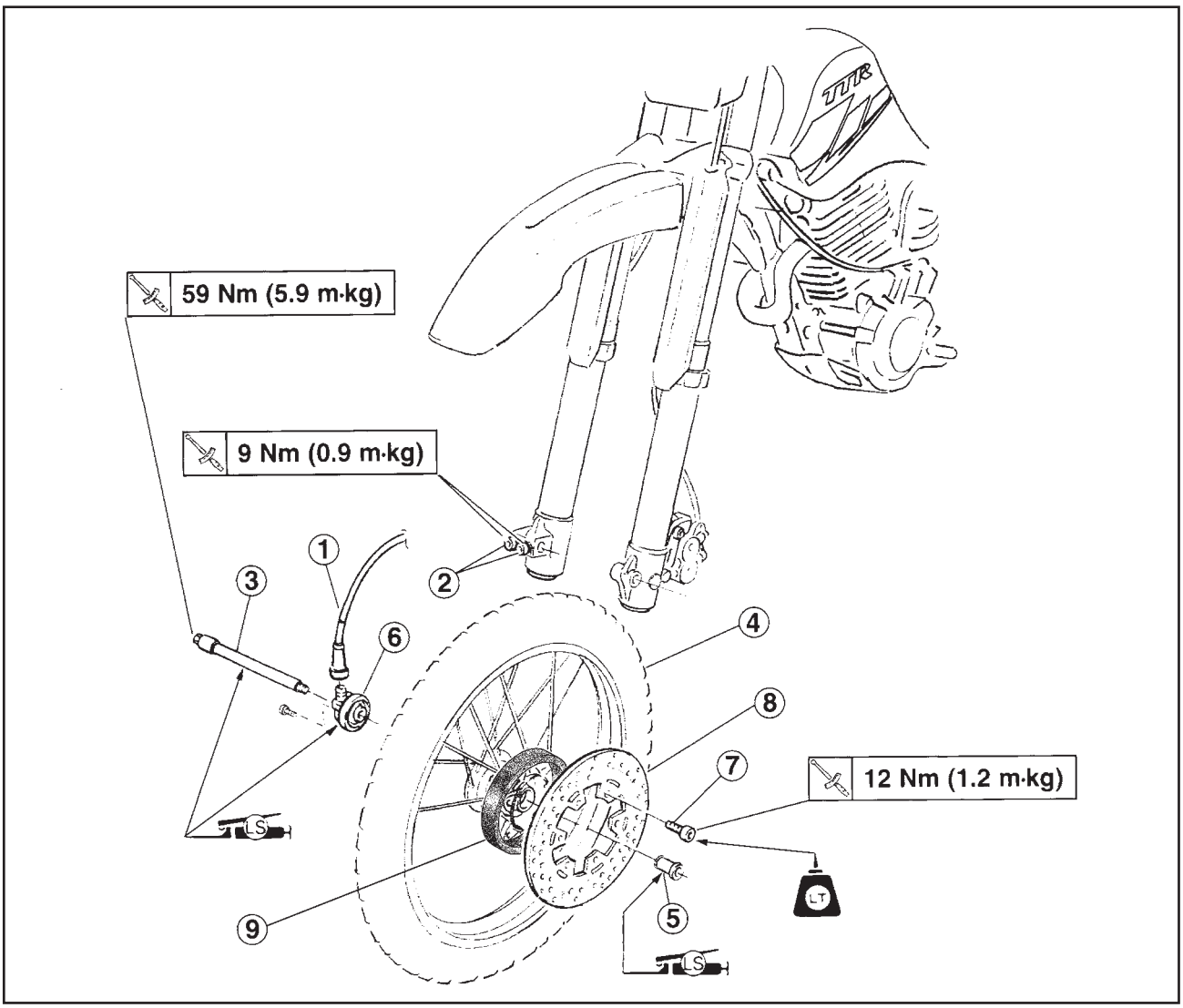

Order	Job name/Part name	Q.ty	Remarks
	Front wheel and brake disc removal		Remove the parts in order. **WARNING** **Securely support the motorcycle so there is no danger of it falling over.**
1	Speedometer cable	1	Disconnect.
2	Pinch bolt	2	Loosen.
3	Wheel axle	1	Refer to “FRONT WHEEL INSTALLATION” section.
4	Front wheel assembly	1	
5	Collar	1	
6	Gear unit assembly	1	
7	Brake disc screw	6	
8	Brake disc	1	
9	Ring	1	Reverse the removal procedure for installation.

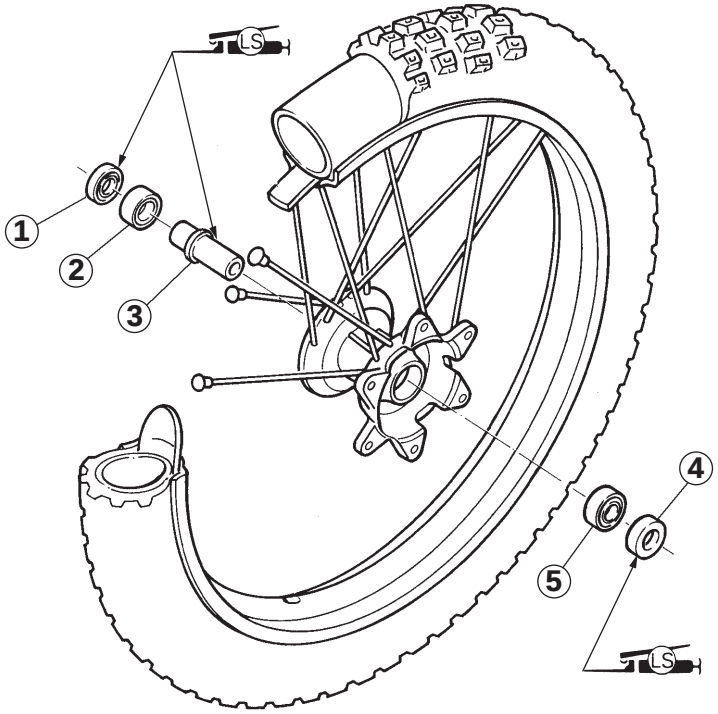

Order	Job name/Part name	Q.ty	Remarks
	Front wheel disassembly		Remove the parts in order.
1	Oil seal	1	Refer to “FRONT WHEEL DISASSEMBLY/ ASSEMBLY” section.
2	Bearing	1	
3	Spacer	1	
4	Oil seal	1	
5	Bearing	1	
			Reverse the removal procedure for installation.

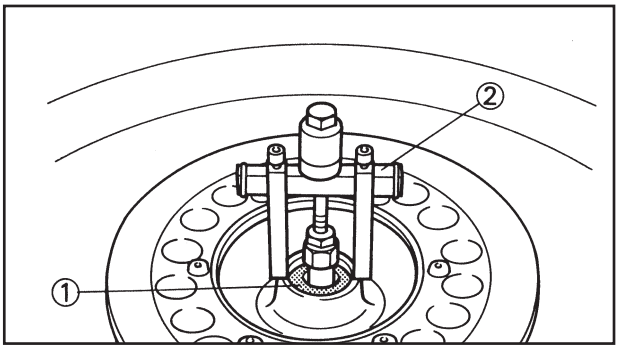

FRONT WHEEL DISASSEMBLY

1. Remove:
   - Oil seal
   - Bearing (1)
   - Spacer

▼▼▼▼▼▼▼▼▼▼▼▼▼▼▼▼▼▼▼▼▼▼▼▼▼▼▼▼▼▼▼▼▼▼

Removal procedure:

- Clean the outside of the hub.
- Remove the dust cover with a flat-headed screwdriver.

NOTE:

Place a rag on the outside to avoid damaging the hub.

- Disassemble the bearing (1) with a normal puller (2).

▲▲▲▲▲▲▲▲▲▲▲▲▲▲▲▲▲▲▲▲▲▲▲▲▲▲▲▲▲▲▲▲▲▲

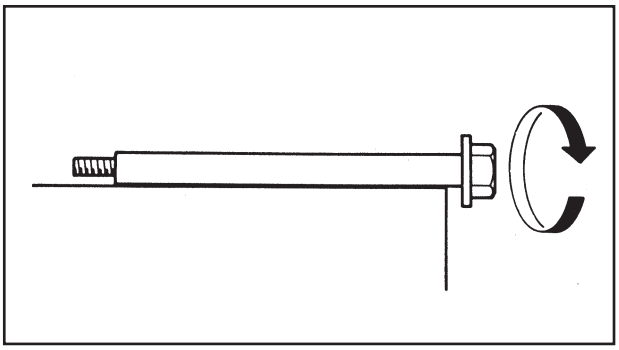

FRONT WHEEL INSPECTION

1. Inspect:
   - Front wheel axle
     (by rolling it on a flat surface)
     Bends → Replace.

⚠ WARNING

Do not attempt to straighten a bent axle.

2. Inspect:
   - Front tire
     Wear/damage → Replace.
     Refer to “TIRE INSPECTION” in CHAPTER 3.
   - Front wheel
     Refer to “WHEEL INSPECTION” in CHAPTER 3.

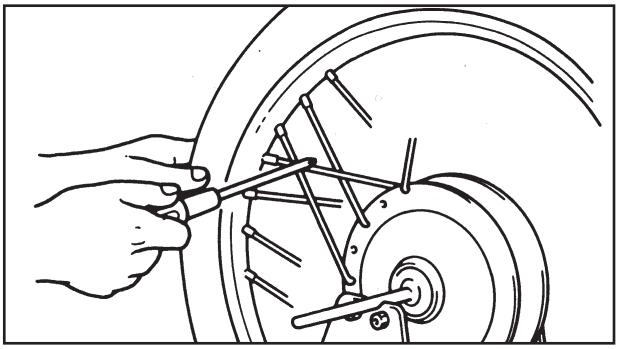

3. Inspect:
   - Spoke(s)
     Bent/Damaged → Replace.
     Loose spoke(s) → Tighten.
     Turn the wheel and hit the spokes gently with a screwdriver.

NOTE:

A well tightened spoke makes a distinct, sharp noise: a loose spoke makes a dull, muffled noise.

4. Tighten:
   - Loose spokes

Spoke:
2 Nm (0.2 mkg)

NOTE:
After tightening the spokes, check the centring of the wheel.

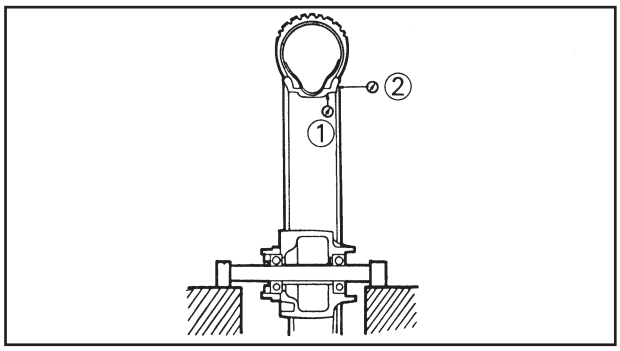

5. Measure:
   - Front wheel runout
     Over the specified limits → Replace.

Front wheel runout limits:
Radial (1) : 1.0 mm
Lateral (2) : 0.5 mm

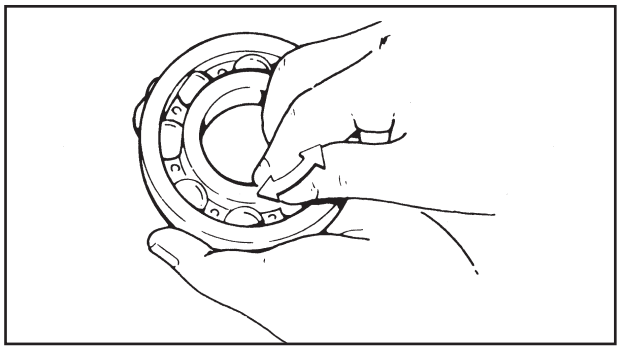

6. Inspect:
   - Front wheel bearings
     Bearings allow free play in the wheel hub or the wheel does not turn smoothly → Replace.
   - Oil seal
     Wear/damage → Replace.

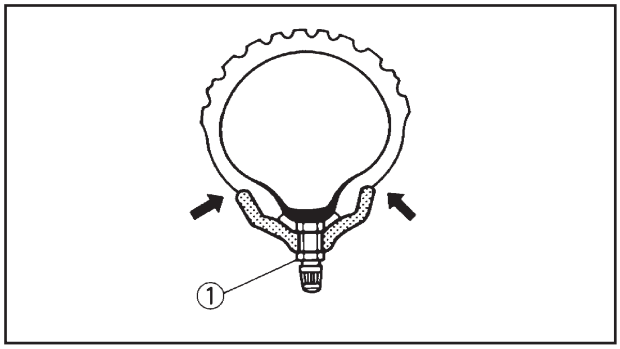

WARNING

- **After assembling a tyre, drive slowly to allow it to adapt to the rim. If this precaution is not observed, damage might be caused to the motorcycle and accidents to the driver.**
- **After repairing or changing a tyre, do not forget to tighten the valve lock nut (1) to the prescribed torque.**

Valve lock nut:
1.5 Nm (0.15 mkg)

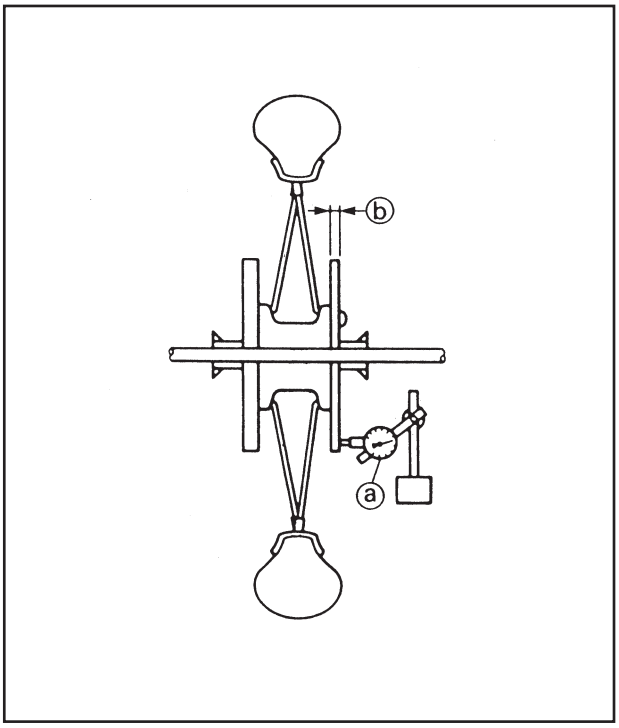

BRAKE DISC INSPECTION

1. Inspect:
   - Brake disc
     Wear/Damage → Replace.
2. Measure:
   - Brake disc deflection (a)
     If over envisaged limits → Verify wheel centring.
     If the wheel centring is correct, replace the brake disc.

Maximum deflection (brake disc):
0.15 mm

Misure at 2 mm from disc edge

- Brake disc thickness (b)
  If out of specified limits → Replace.

Minimum thickness (brake disc):
3.6 mm

IFRONT WHEEL ASSEMBLY

1. Install:
   - Spacer
   - Bearings
   - Oil seal

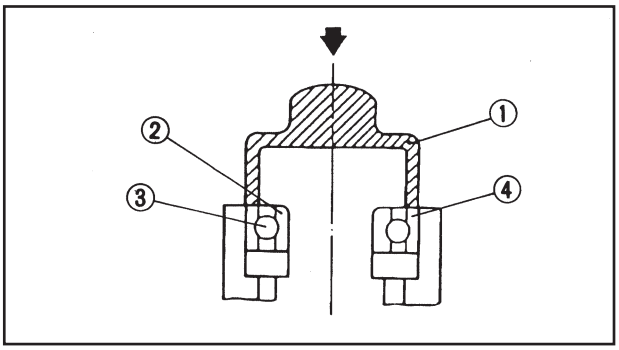

▼▼▼▼▼▼▼▼▼▼▼▼▼▼▼▼▼▼▼▼▼▼▼▼▼▼▼▼▼▼▼▼

Assembly procedure:

- Install the new bearing and the dust cover by following the disassembly procedures in reverse order.

NOTE:

Use a wrench (1) with an external diameter equal to that of the bearing and dust cover.

CAUTION:

Do not strike the bearing inner race (2) or balls (3). The contact must only be made with the outer race (4).

▲▲▲▲▲▲▲▲▲▲▲▲▲▲▲▲▲▲▲▲▲▲▲▲▲▲▲▲▲▲▲▲

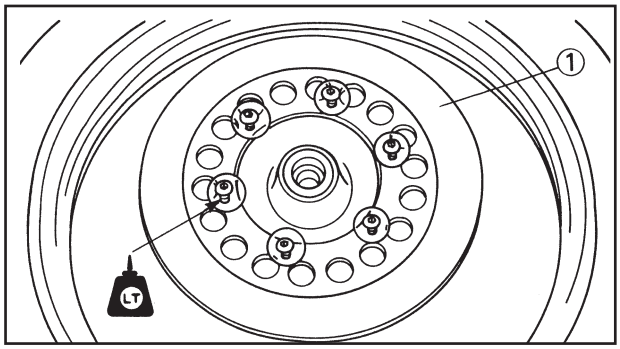

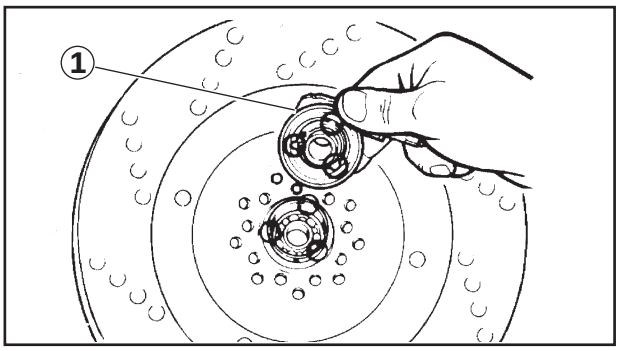

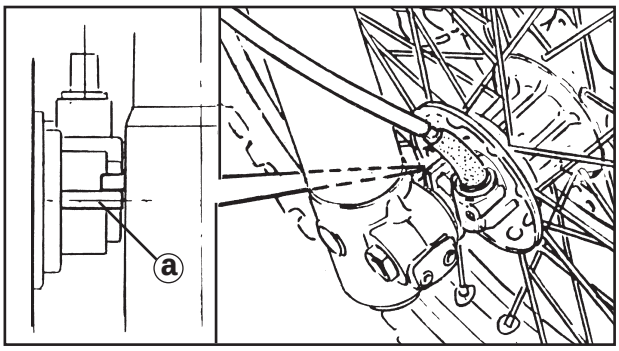

FRONT WHEEL INSTALLATION

1. Install:
   - Brake disc (1)

	Screw (brake disc): **12 Nm (1.2 mkg)**

NOTE:
- Apply LOCTITE® to the threads of brake disc screw.
- Tighten the screws (brake disc) in stage using a crisscross pattern.

2. Install:
   - Speedometer gear unit (1)

NOTE:
Make sure that the wheel hub and the speedometer gear unit are installed with the projections meshed into the slots.

3. Tighten:
   - Front wheel
   - Front wheel axle

	Front wheel axle: **59 Nm (5.9 mkg)**

NOTE:
Make sure that the slot (a) in the speedometer gear unit fits under the stopper on the front fork outer tube.

   - Pinch bolt

	Pinch bolt: **9 Nm (0.9 mkg)**

WHEEL STATIC BALANCE ADJUSTMENT

NOTE:
- After replacing the tire and/or rim, the wheel static balance should be adjusted.
- Adjust the front wheel static balance with the brake disc installed.

1. Remove:
   - Balancing weight
2. Set:
   - Wheel (on a suitable stand)
3. Find:
   - Heavy spot

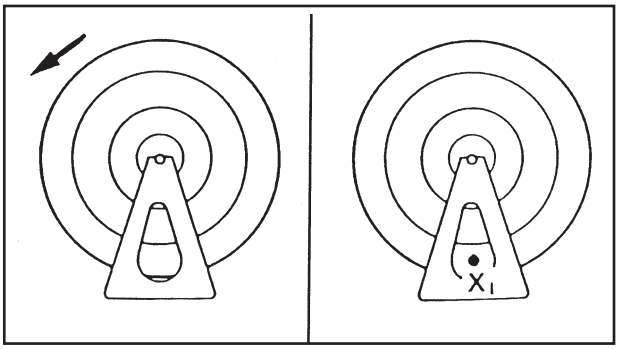

Procedure:

a. Spin the wheel and wait for it to rest.
b. Put an "X_1" mark on the wheel's bottom spot.
c. Turn the wheel so that the "X_1" mark is 90° up.
d. Release the wheel and wait for it to rest.
   Put an "X_2" mark on the wheel's bottom spot.
e. Repeat the above b., c., and d. several times until all marks come to the same spot.
f. This spot is the wheel's heavy spot "X".

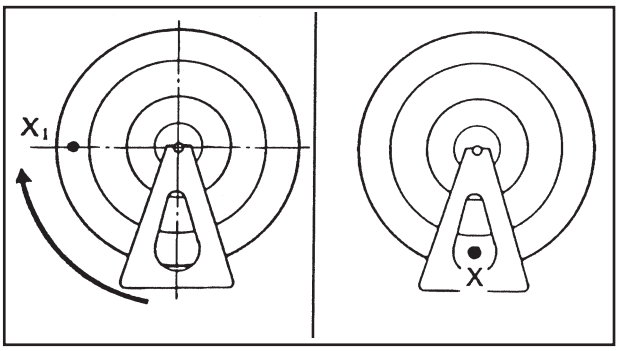

4. Adjust:
   - Wheel static balance

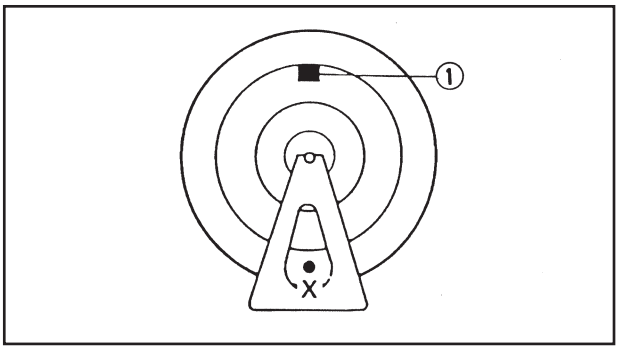

Adjusting steps:

- Install a balancing weight (1) on the rim exactly opposite to the heavy spot "X".

NOTE:
Start with the smallest weight.

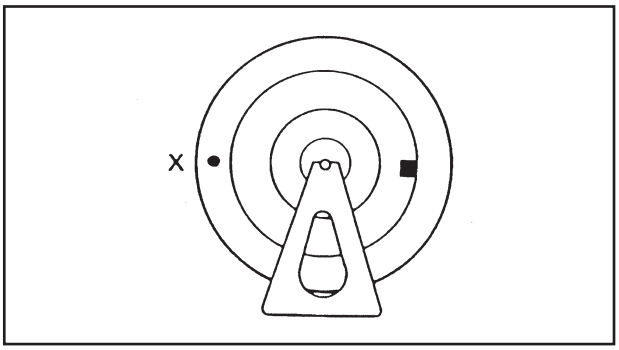

- Turn the wheel so that the heavy spot is 90° up.
- Check that the heavy spot is at rest there. If not, try another weight until the wheel is balanced.

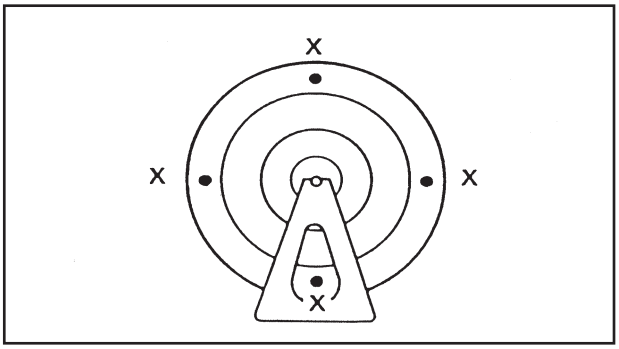

5. Check:
   - Wheel static balance

Checking steps:

- Turn the wheel so that it comes to each point as shown.
- Check that the wheel is at rest at each point. If not, readjust the front wheel static balance.

FRONT BRAKE

BRAKE PAD

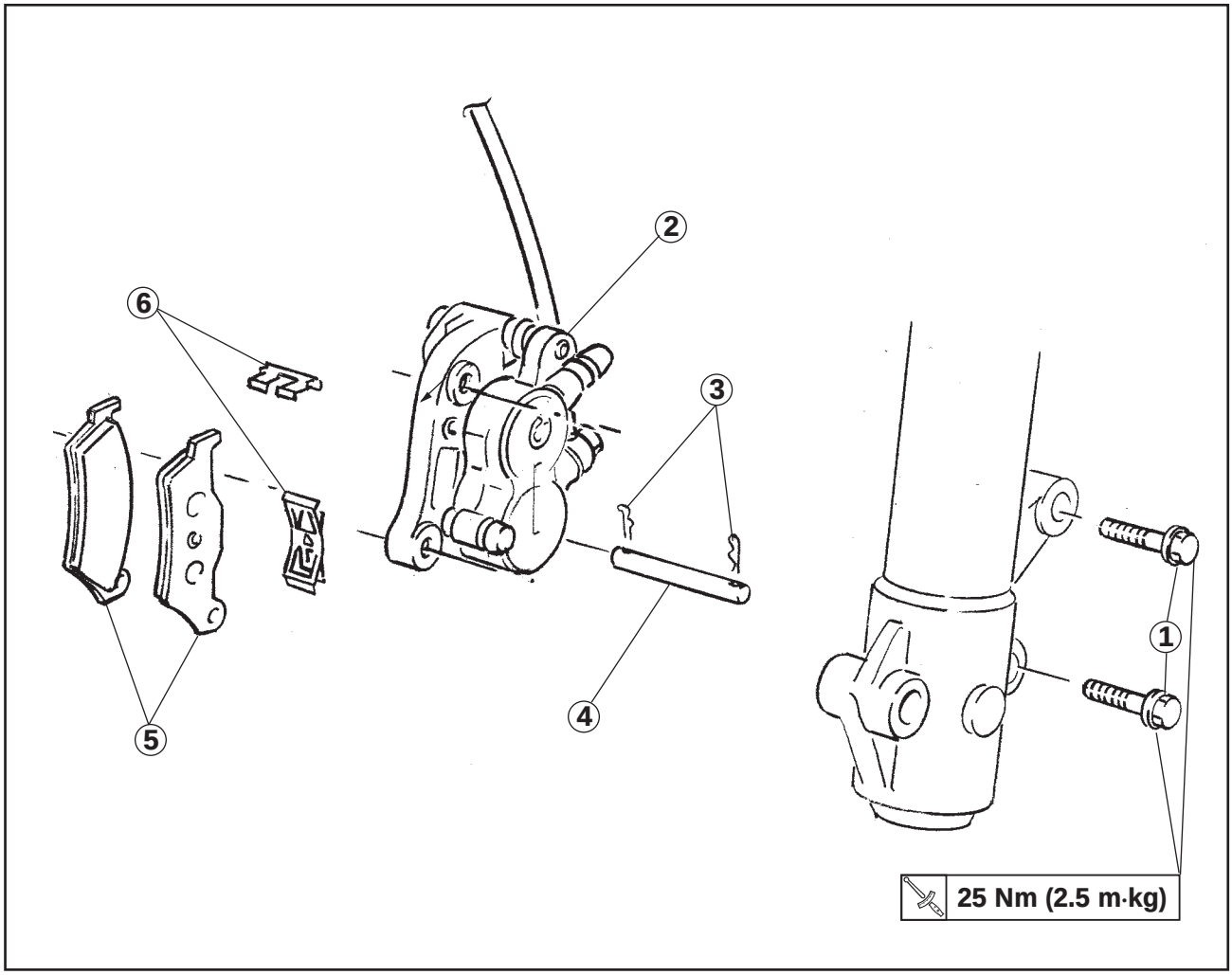

Order	Job name/Part name	Q.ty	Remarks
	Brake pad removal		Remove the parts in order.
1	Brake caliper screw	2	Refer to “BRAKE PAD REPLACEMENT” section.
2	Brake caliper	1	
3	Pad pin retainer	2	
4	Pad pin	1	
5	Brake pad	2	
6	Pad spring	2	
			Reverse the removal procedure for installation.

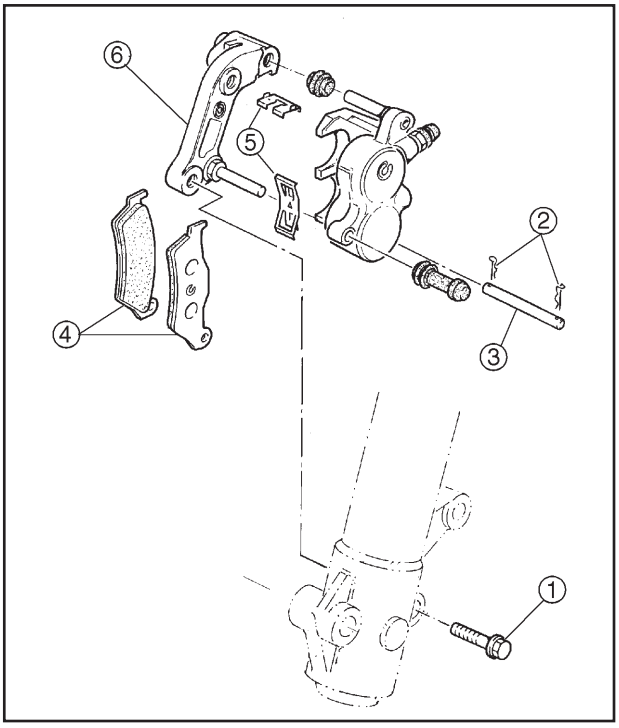

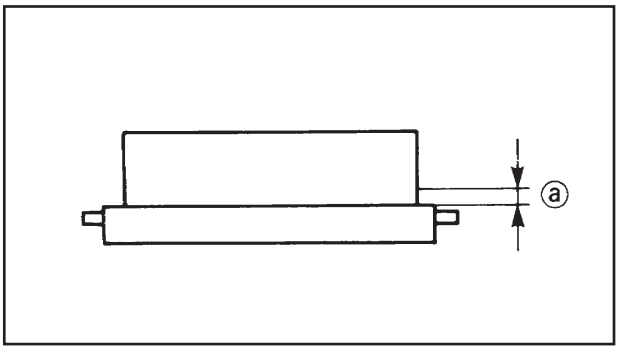

CAUTION:

Brake components must not be disassembled. The builder declines every responsibility after brake components disassembly (brake master cylinder or brake caliper) or in case of use of non original parts.

DO NOT:

- **Remove brake components from the motorcycle unless is absolutely necessary.**
- **Use solvents on internal brake components.**
- **Use brake fluid already used for bleeding.**
- **Allow brake fluid to come into contact with the eyes as it may cause injury.**
- **Allow brake fluid to come into contact with painted or plastic parts as it may damage them.**
- **Disconnect any hydraulic connection, otherwise the whole system must be disassembled, drained, cleaned, then properly filled and bled after reassembly.**

BRAKE PAD REPLACEMENT

NOTE:

It is unnecessary to disassemble the brake hose to replace the pads.

1. Remove:
   - Caliper bracket fastening screws (1) (deplace the caliper)
2. Remove:
   - Pin retainers (2)
   - Pad fastening pin (3)
   - Brake pads (4)
   - Pad springs (5)
   - Caliper bracket (6)

NOTE:

- If you replace the pads, also replace the springs.
- If one of the two pads has to be replaced because it is worn, replace both.

Wear limit (a):
3.7 mm

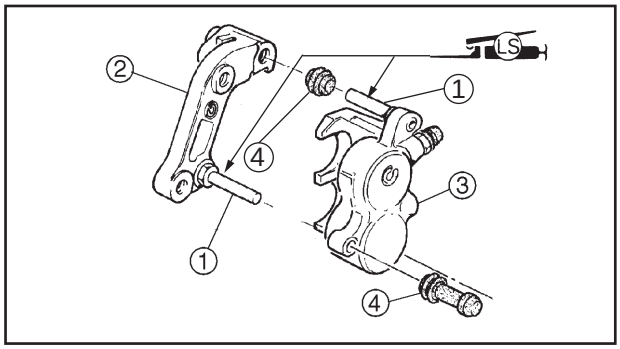

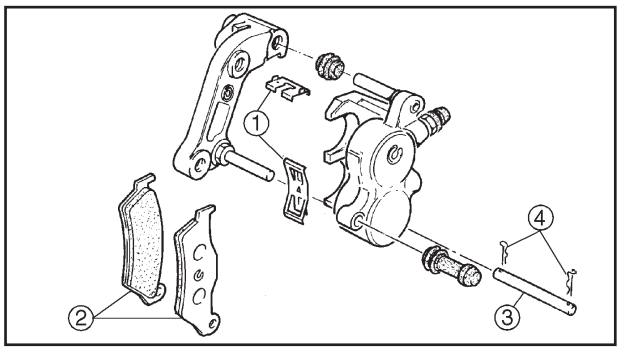

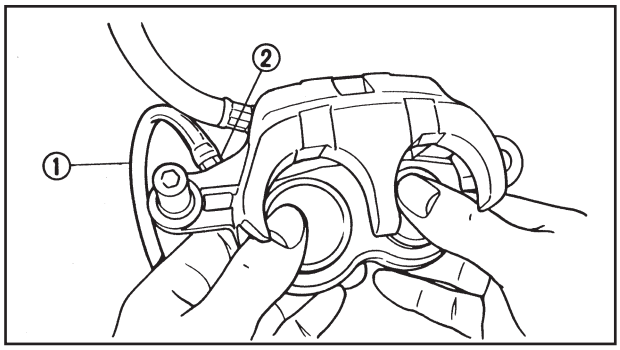

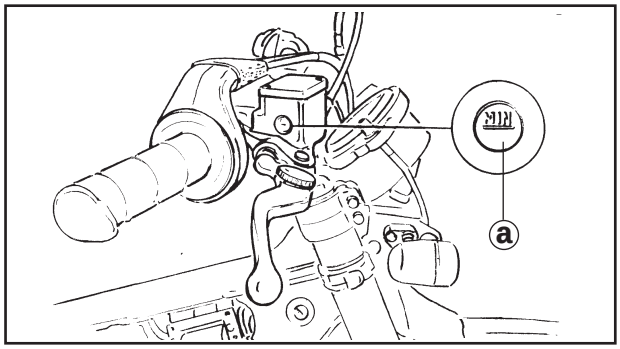

3. Lubricate:
   - Guide pins (1)

	Lithium-base grease

4. Install:
   - Pin bracket (2) (on the caliper body (3))

NOTE:
Fit the rubber protections (4) when installing the caliper body.

5. Install:
   - Pad springs (1) (new)
   - Brake pads (2) (new)
   - Pad fastening pin (3)
   - Pin retainers (4)

▼▼▼▼▼▼▼▼▼▼▼▼▼▼▼▼▼▼▼▼▼▼▼▼▼▼▼▼▼▼▼▼▼▼

Installation procedure:

- Connect the hose (1) firmly to the caliper bleeder screw (2). Place the other end of the hose in an open container.
- Loosen the caliper bleeder screw and push the pistons into the caliper with your finger.
- Retighten the bleeder screw (2).

	Caliper bleeder screw: **14 Nm (1.4 mkg)**

- Install the (new) brake pads and (new) springs.
- Fit the pad fastening pin well into its housing by hammering with a punch with a suitable diameter.
- Install the (new) pin retainers.
- Install the caliper and screws.

	Caliper fastening screw: **25 Nm (2.5 kgm)**

▲▲▲▲▲▲▲▲▲▲▲▲▲▲▲▲▲▲▲▲▲▲▲▲▲▲▲▲▲▲▲▲▲▲

6. Check:
   - Level of brake fluid in reservoir.
     See section “BRAKE FLUID LEVEL INSPECTION” in CHAPTER 3.
   (a) Lower minimum level “MIN”

7. Check:
   - Brake lever operation
     Lever soft and spongy → Bleed air from brake circuit.
     See section “AIR BLEEDING (HYDRAULIC BRAKE SYSTEM)” in CHAPTER 3.

MASTER CYLINDER

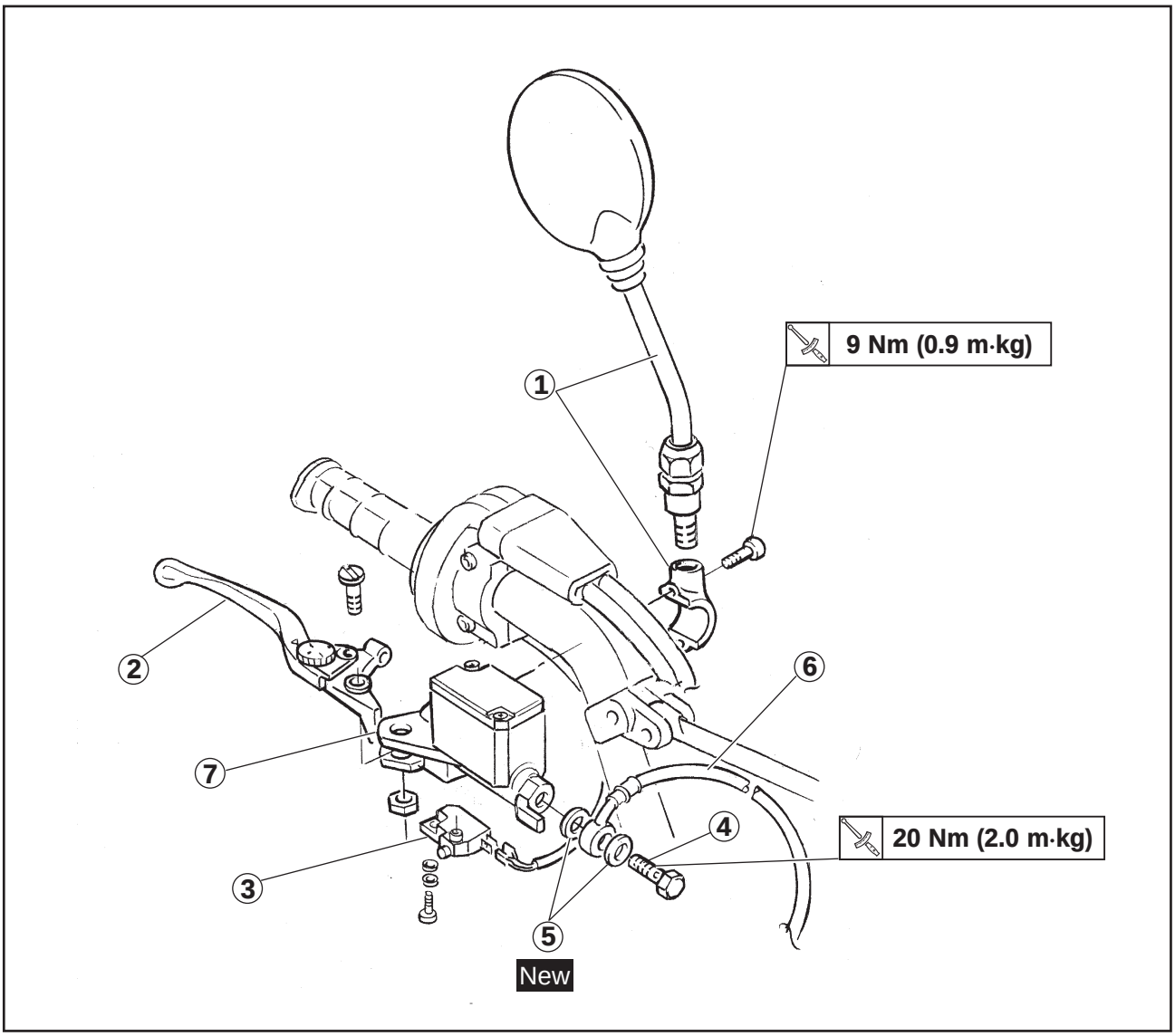

Order	Job name/Part name	Q.ty	Remarks
	Master cylinder removal		Remove the parts in order.
	Brake fluid		Drain.
1	Rear view mirror (right)/ Master cylinder bracket	1/1	
2	Brake lever	1	
3	Brake switch	1	
4	Union bolt	1	Refer to “MASTER CYLINDER INSTALLATION” section.
5	Plain washer	2	
6	Brake hose	1	
7	Master cylinder	1	
			Reverse the removal procedure for installation.

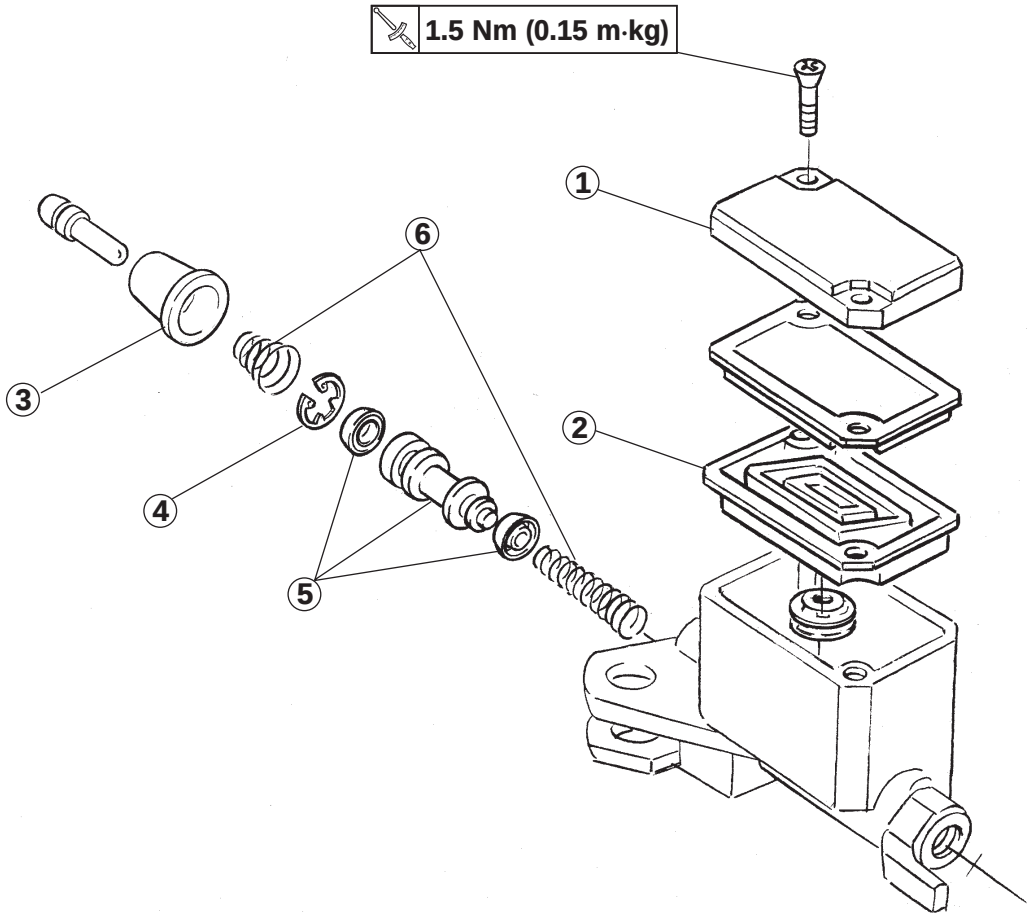

Order	Job name/Part name	Q.ty	Remarks
	Master cylinder disassembly		Remove the parts in order.
1	Reservoir cap	1	Refer to “MASTER CYLINDER ASSEMBLY” section.
2	Diaphragm	1	
3	Master cylinder boot	1	
4	Circlip	1	
5	Master cylinder assembly	1	
6	Spring	2	
			Reverse the disassembly procedure for assembly.

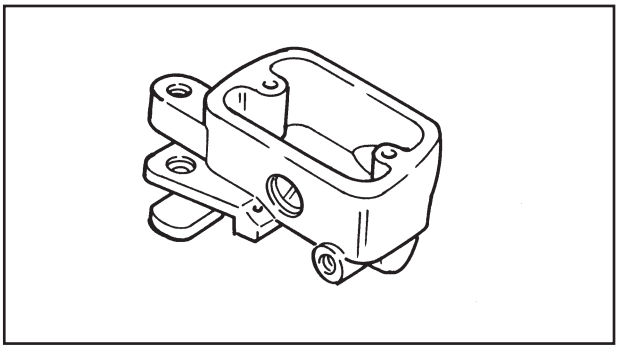

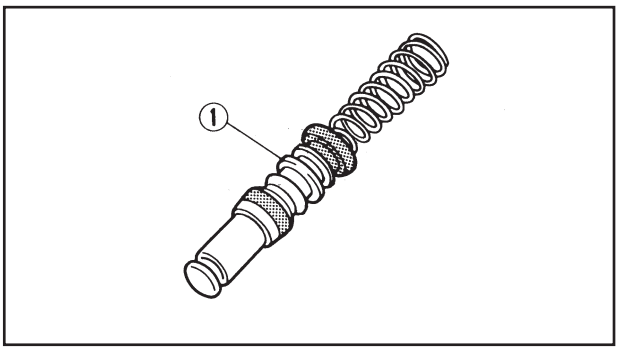

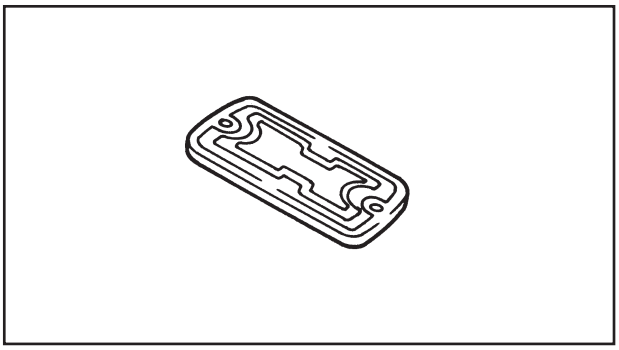

MASTER CYLINDER INSPECTION

1. Inspect:
   - Master cylinder assembly
     Wear/scratches → Replace the master cylinder assembly.
   - Master cylinder body
     Cracks/damage → Replace the master cylinder assembly.
   - Fluid delivery passage (master cylinder)
     Obstruction → Clean with a jet of compressed air.
2. Inspect:
   - Master cylinder piston unit (1)
     Scratches/wear/damage → Replace the master cylinder assembly.
3. Inspect:
   - Diaphragm
     Wear/damage → Replace.
4. Inspect:
   - Brake hose
     Cracks/wear/damage → Replace.

MASTER CYLINDER ASSEMBLY

WARNING

- **All internal brake components should be cleaned and lubricated with new brake fluid only before installation.**

Recommended brake fluid:
DOT 4

- **In case of non correct operation of the brake master cylinder, replace the master cylinder assembly.**

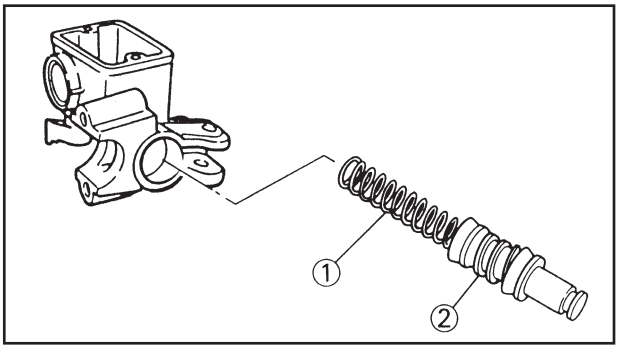

1. Install:
   - Spring (1)
   - Master cylinder (2)

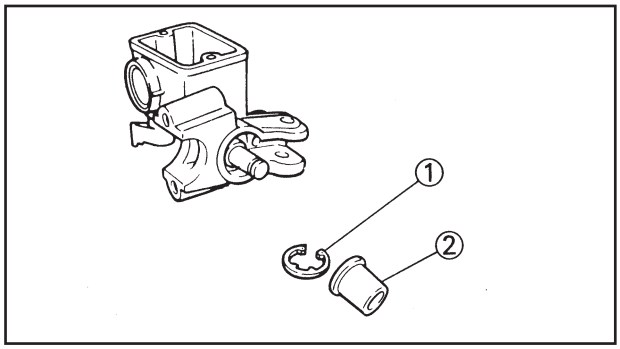

2. Install:
   - Circlip (1)
   - Master cylinder boot (2)

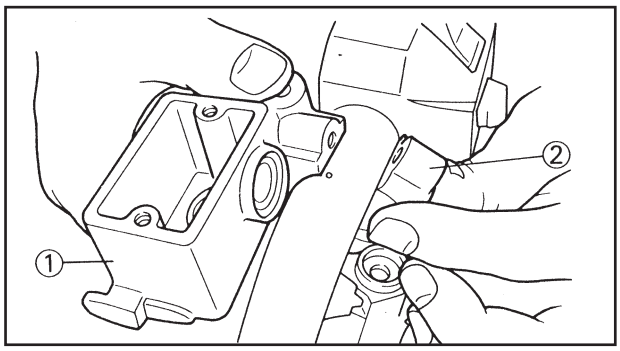

MASTER CYLINDER INSTALLATION

1. Install:
   - Master cylinder (1)
   - Master cylinder bracket (2)

Screw (master cylinder bracket):
9 Nm (0.9 mkg)

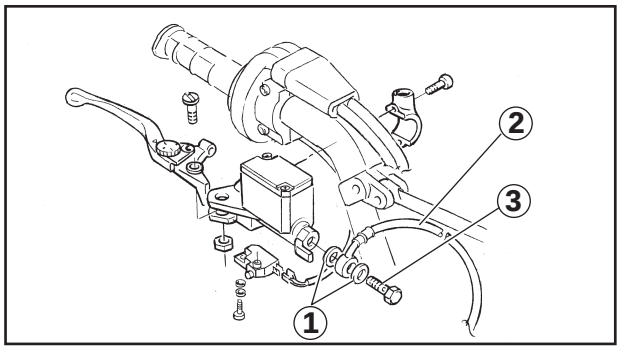

2. Install:
   - Plain washer (1) (new)
   - Brake hose (2)
   - Union bolt (3)

Union bolt (brake hose):
20 Nm (2.0 mkg)

NOTE:

- When tightening the union bolt be sure to put the brake hose in the correct position.
- Check that the brake hose has stayed in the correct position. Adjust if necessary.

WARNING

- **Check that the brake hose routing is as described. Refer to "CABLE ROUTING" section.**
- **Always use new plain washers.**

3. Fill:
   - Brake fluid reservoir

Recommended brake fluid:
DOT 4

CAUTION:

Brake fluid may deteriorate painted surfaces or plastic parts. Always clean up spilled fluid immediately.

WARNING

- **Use only designated quality brake fluid. Otherwise, the rubber seals may deteriorate, causing leakage and poor brake performance.**
- **Refill with the same type of brake fluid: mixing fluids may result in a harmful chemical reaction and lead to poor performance.**
- **Be careful that water does not enter the significantly lower the boiling point of the fluid may result in vapor lock.**

4. Air bleed:
   - Brake system
     Refer to “AIR BLEEDING (HYDRAULIC BRAKE SYSTEM)” section in CHAPTER 3.

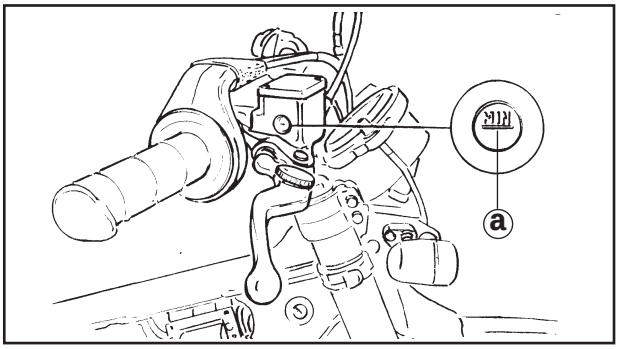

5. Inspect:
   - Brake fluid level
     Lower than “MIN” mark → Fill.
     Refer to “BRAKE FLUID INSPECTION” section in CHAPTER 3.

   (a) Minimum level mark “MIN”

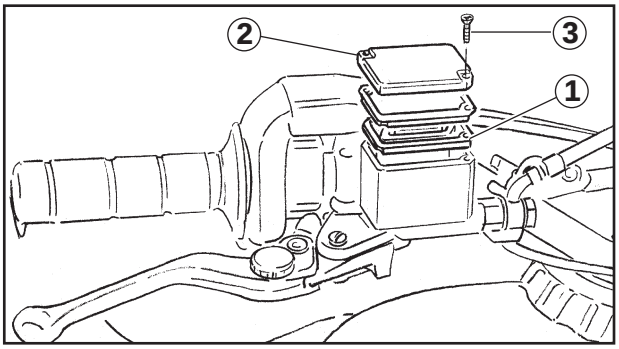

6. Install:
   - Diaphragm (1)
   - Master cylinder cap (2)
   - Screw (3) (cap)

	Screw (master cylinder cap): 1.5 Nm (0.15 mkg)

BRAKE CALIPER

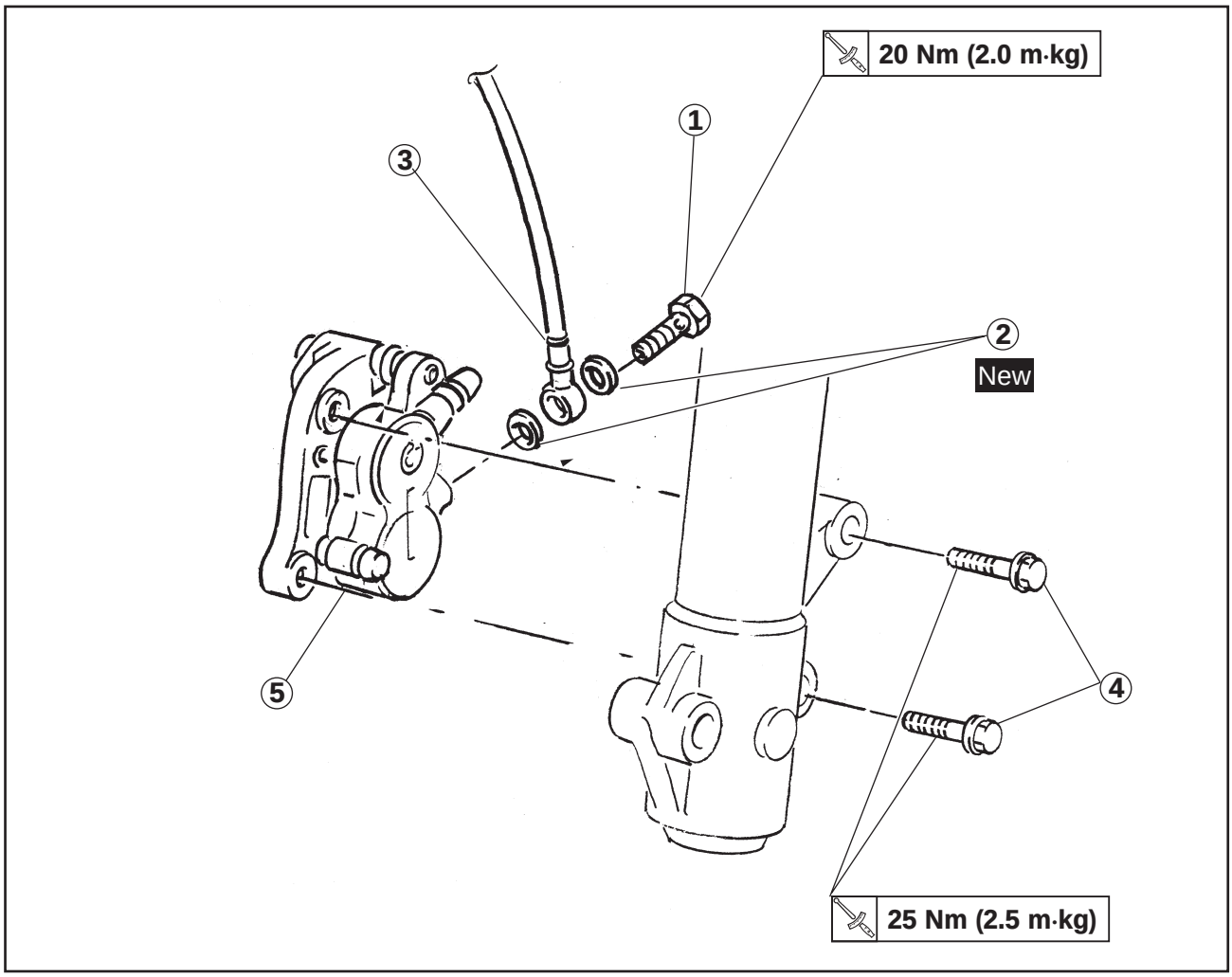

Order	Job name/Part name	Q.ty	Remarks
	Caliper removal		Remove the parts in order.
	Brake fluid		Drain.
1	Union bolt	1	Refer to “CALIPER INSTALLATION” section
2	Plain washer	2	
3	Brake hose	1	
4	Caliper support bolt	2	
5	Caliper assembly	1	
			Reverse the removal procedure for installation.

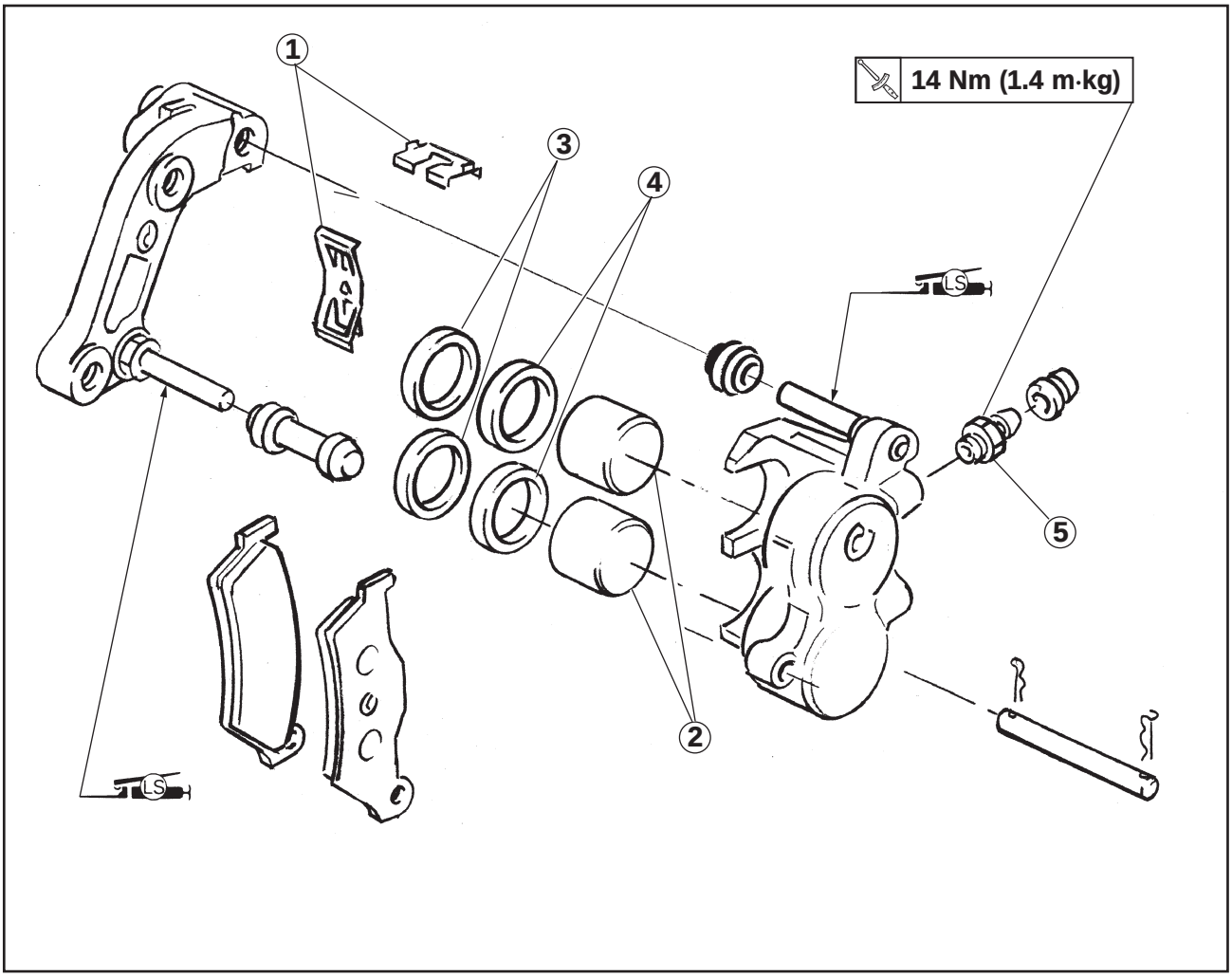

Order	Job name/Part name	Q.ty	Remarks
	Caliper disassembly Brake pad		Remove the parts in order. Refer to “BRAKE PAD” section.
1	Pad spring	2	
2	Caliper piston	2	Refer to “BRAKE CALIPER DISASSEMBLY/ASSEMBLY” section.
3	Dust seal	2	
4	Piston seal	2	
5	Bleed screw	1	Refer the disassembly procedure for assembly.

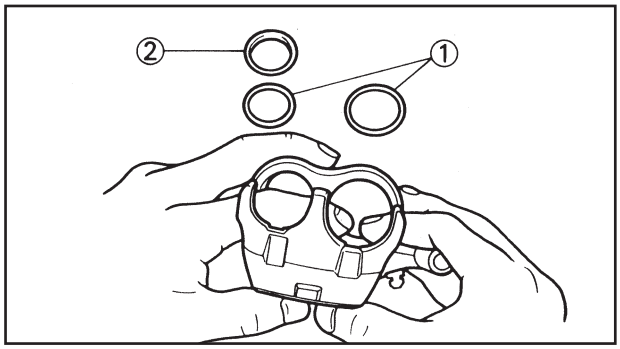

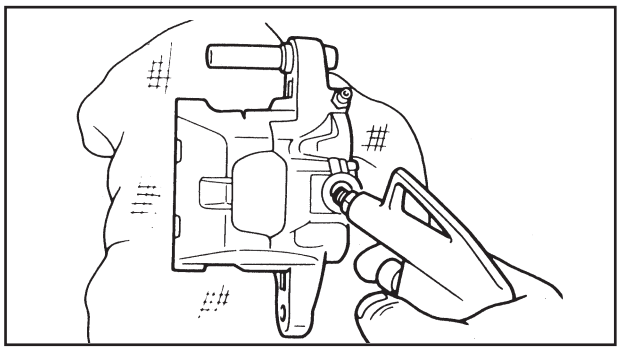

BRAKE CALIPER DISASSEMBLY

1. Remove:
   - Brake caliper piston
   - Dust seal (1)
   - Piston seal (2)

▼▼▼▼▼▼▼▼▼▼▼▼▼▼▼▼▼▼▼▼▼▼▼▼▼▼▼▼▼▼▼▼

Removal procedure:

- Blow compressed air into the hose joint opening to force out the caliper piston from the brake caliper body.

WARNING

- **Never try to pry out the caliper piston.**
- **Cover the caliper piston with a rag. Be careful not to get injured when the piston is expelled from the master cylinder.**

- Remove the piston seal.

▲▲▲▲▲▲▲▲▲▲▲▲▲▲▲▲▲▲▲▲▲▲▲▲▲▲▲▲▲▲▲▲

CALIPER INSPECTION

Recommended programme for the replacement of brake system components:	
Brake pads	**When necessary**
Brake hoses	**Every four years**
Brake fluid	**Replace every 24,000 km or 24 months and whenever the brake is disassembled.**

WARNING

All internal brake components should be cleaned and lubricated with new brake fluid only before installation. Do not use solvents to prevent sealing elements from becoming misshapen or swollen.

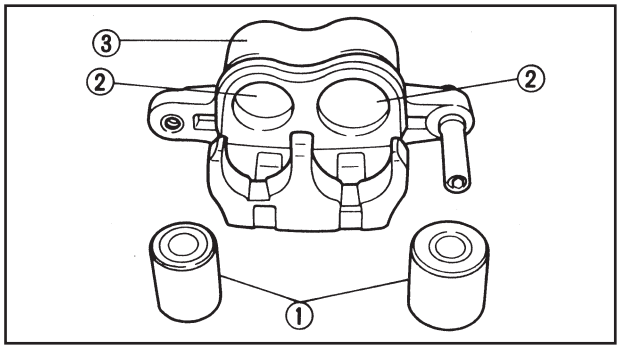

1. Inspect:
   - Caliper piston (1)
     Scratches/wear/rust → Replace caliper assembly.
   - Caliper cylinder (2)
     Scratches/wear → Replace caliper assembly.
   - Caliper (3)
     Cracks/damaged → Replace the brake caliper assembly..

- Fluid delivery passage (caliper)
  Obstruction → Clean with compressed air.

WARNING

In case of non correct operation of the brake caliper, replace the brake caliper assembly.

CALIPER ASSEMBLY

WARNING

- **All internal brake components should be cleaned and lubricated with new brake fluid only before installation.**

	Recommended brake fluid: **DOT 4**

- **In case of non correct operation of the brake caliper, replace the brake caliper assembly.**

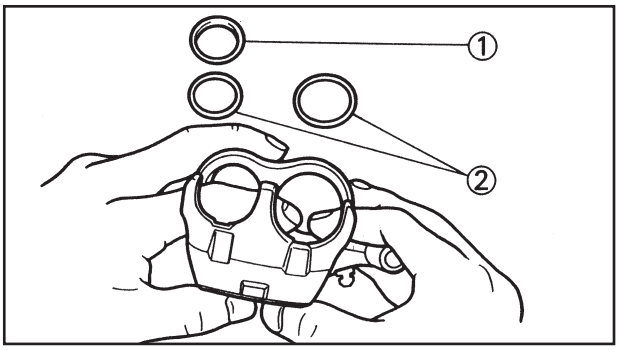

1. Install:
   - Piston seals (1)
   - Dust seals (2)

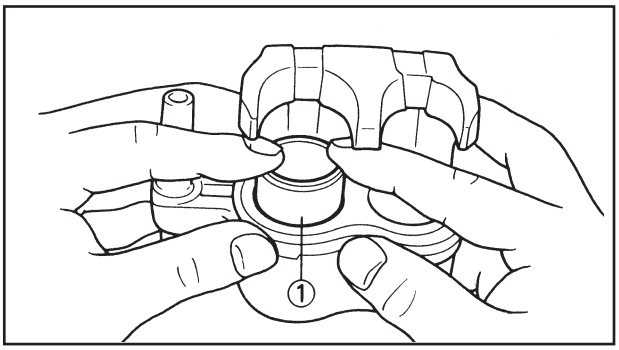

2. Install:
   - Brake caliper pistons (1)

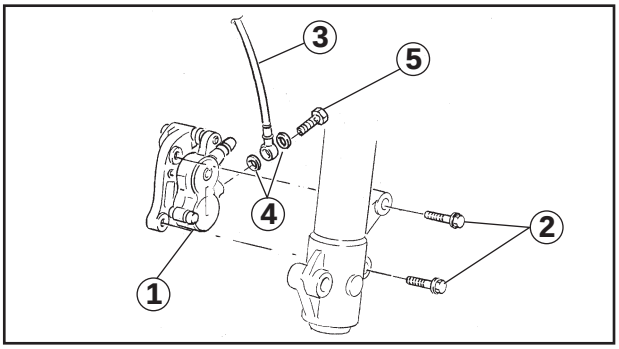

CALIPER INSTALLATION

1. Install:
   - Brake caliper (1)
   - Caliper support bolts (2)

	Bolt (caliper support): **25 Nm (2.5 mkg)**

- Brake hose (3)
- Plain washers (4) (new)
- Union bolt (5)

	Union bolt: **20 Nm (2.0 mkg)**

WARNING

Check that the brake hose routing is correct. Refer to "CABLE ROUTING" section.

2. Fill:
   - Brake fluid reservoir

	Recommended brake fluid: DOT 4

CAUTION:

Brake fluid may deteriorate painted surfaces or plastic parts. Always clean up spilled fluid immediately.

WARNING

- **Use only designated quality brake fluid. Otherwise, the rubber seals may deteriorate, causing leakage and poor brake performance.**
- **Refill with the same type of brake fluid: mixing fluids may result in a harmful chemical reaction and lead to poor performance.**
- **Be careful that water does not enter the significantly lower the boiling point of the fluid may result in vapor lock.**

3. Air bleed:
   - Brake system
     Refer to "AIR BLEEDING (HYDRAULIC BRAKE SYSTEM)" section in CHAPTER 3.

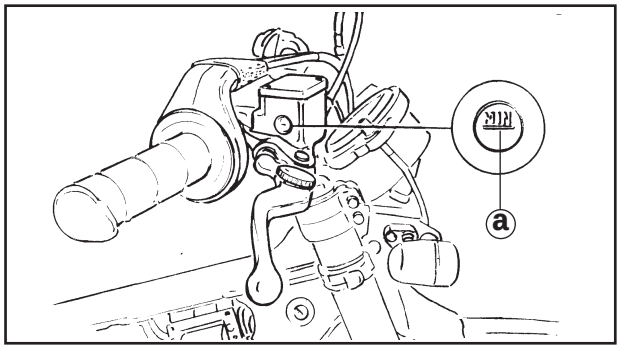

4. Inspect:
   - Brake fluid level
     Lower than "MIN" mark → Fill.
     Refer to "BRAKE FLUID INSPECTION" section in CHAPTER 3.

   (a) Minimum level mark "MIN"

REAR WHEEL AND BRAKE DISC

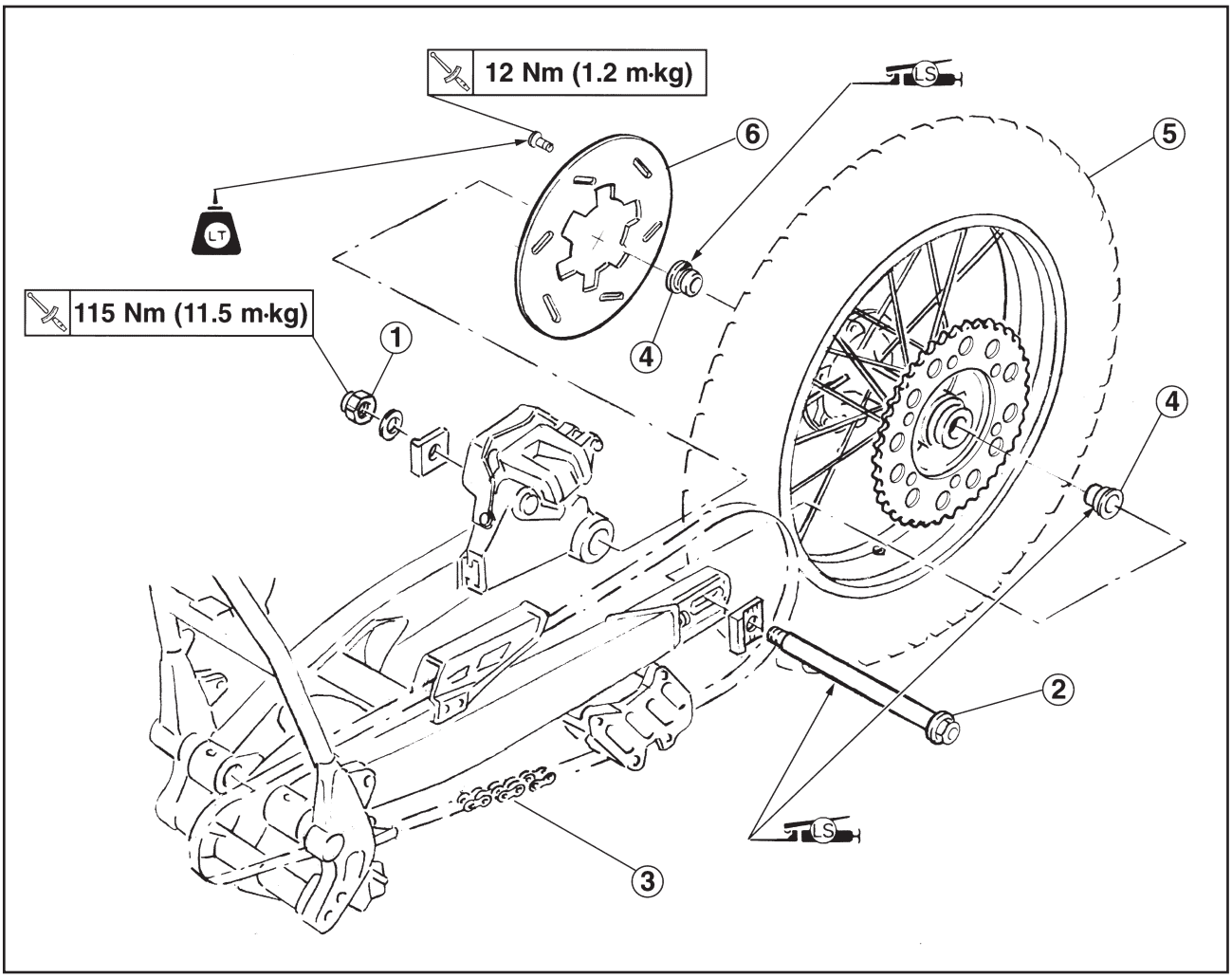

Order	Job name/Part name	Q.ty	Remarks
	Rear wheel and brake disc removal		Remove the parts in order. **WARNING** **Securely support the motorcycle so there is no danger of it falling over.**
1	Axle nut	1	
2	Wheel axle	1	Push the wheel forward and remove the chain.
3	Drive chain	-	
4	Collar	2	Refer to “REAR WHEEL INSTALLATION” section.
5	Rear wheel assembly	1	
6	Brake disc	1	Reverse the removal procedure for installation.

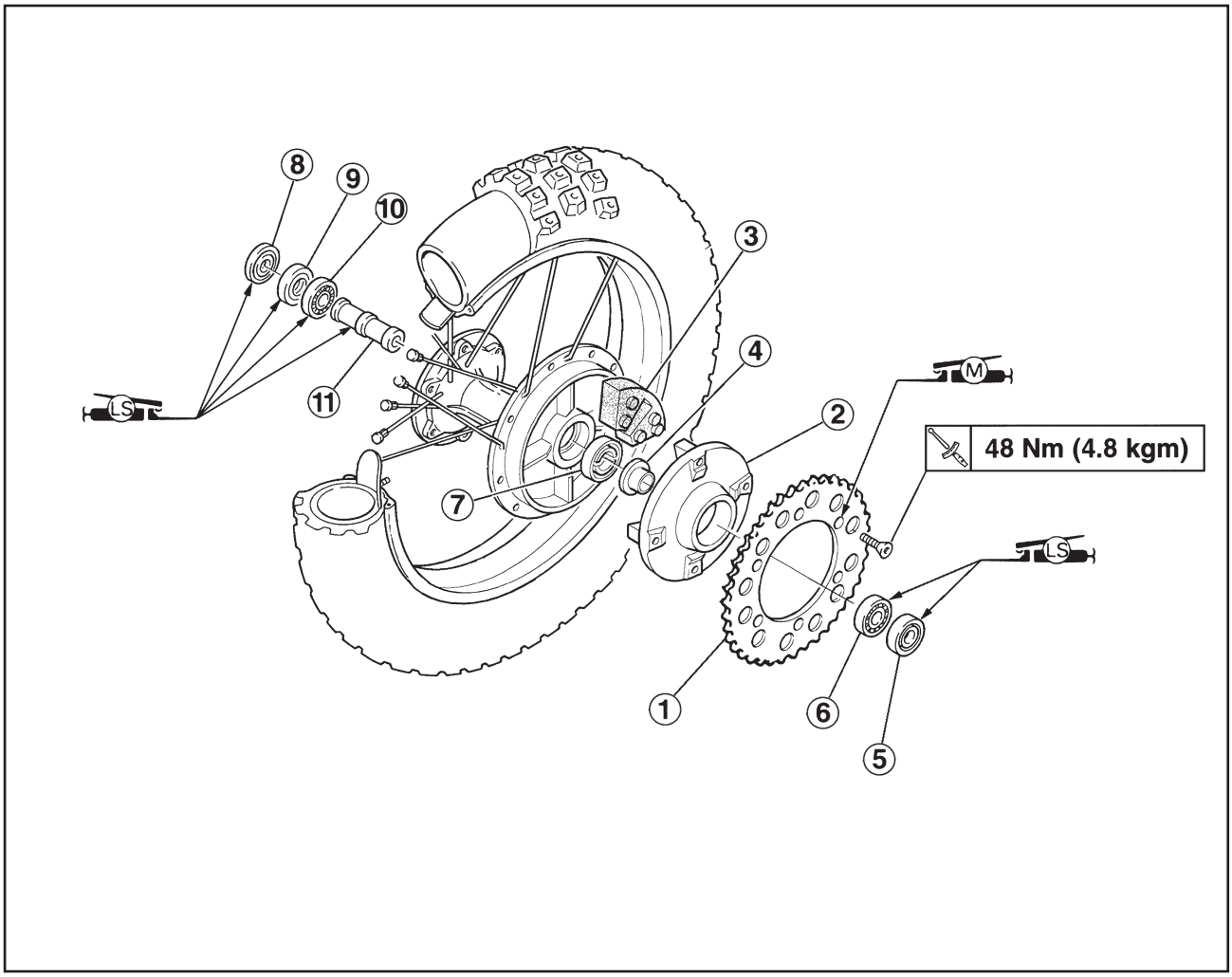

Order	Job name/Part name	Q.ty	Remarks
	Rear wheel disassembly		Remove the parts in order.
1	Driven sprocket	1	Refer to “REAR WHEEL DISASSEMBLY/ASSEMBLY” section.
2	Hub	1	
3	Damper	4	
4	Spacer	1	
5	Oil seal	1	
6	Bearing	1	
7	Bearing	1	
8	Hub dust cover	1	
9	Oil seal	1	
10	Bearing	1	Reverse the removal procedure for installation.
11	Bearing spacer	1	

REAR WHEEL DISASSEMBLY

1. Remove:
   - Hub and driven sprocket
   - Dampers
   - Hub spacer
   - Oil seal
   - Hub bearing
   - Wheel bearing
   - Wheel spacer
   - Wheel bearing
   - Dust cover
   - Oil seal
   - Wheel bearing
   - Wheel spacer

▼▼▼▼▼▼▼▼▼▼▼▼▼▼▼▼▼▼▼▼▼▼▼▼▼▼▼▼▼▼▼▼▼▼

Removal procedure:

- Clean the outside of the hub.
- Remove the dust cover with a flat-headed screw driver.

NOTE:

Place a rag on the outside to avoid damaging the hub.

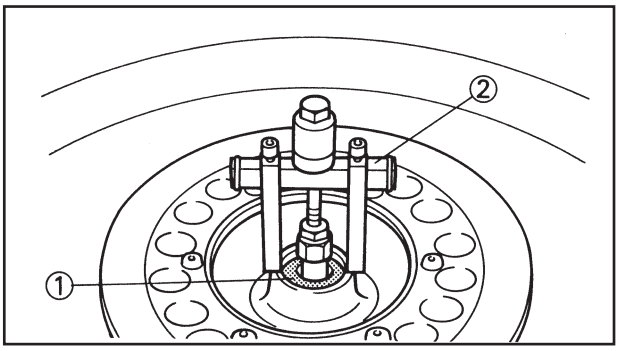

- Disassemble the bearing (1) with a normal puller (2).

▲▲▲▲▲▲▲▲▲▲▲▲▲▲▲▲▲▲▲▲▲▲▲▲▲▲▲▲▲▲▲▲▲▲

REAR WHEEL INSPECTION

1. Inspect:
   - Rear wheel axle
     (by rolling it on a flat surface)
     Bends ➔ Replace.

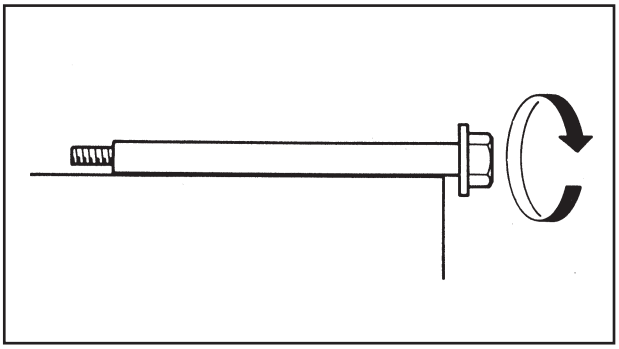

⚠ WARNING

Do not attempt to straighten a bent axle.

2. Inspect:
   - Rear tire
     Refer to “TIRE INSPECTION” in CHAPTER 3.
   - Rear wheel
     Refer to “WHEEL INSPECTION” in CHAPTER 3.
3. Inspect:
   - Spoke(s)
     Bent/Damaged ➔ Replace.
     Loose spoke(s) ➔ Tighten.
     Turn the wheel and hit the spokes gently with a screwdriver.

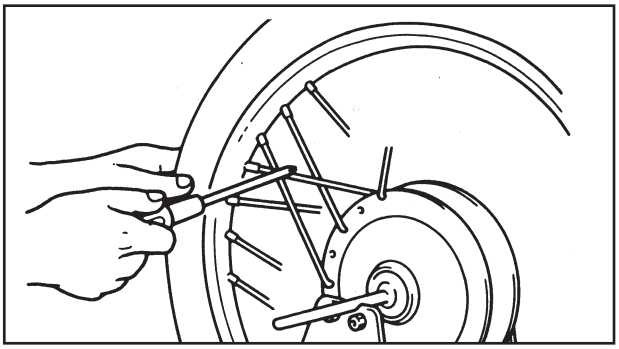

NOTE:

A well tightened spoke makes a distinct, sharp noise: a loose spoke makes a dull, muffled noise.

4. Tighten:
   - Loose spokes

Spoke:
2 Nm (0.2 mkg)

NOTE:
After tightening the spokes, check the centring of the wheel.

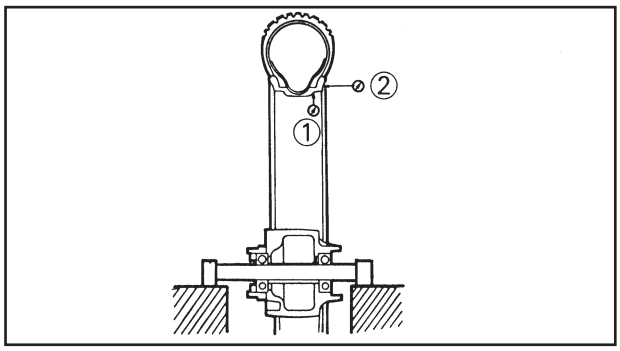

5. Measure:
   - Rear wheel runout
     Over the specified limits → Replace.

Rear wheel runout limits:
Radial (1) : 1.0 mm
Lateral (2) : 0.5 mm

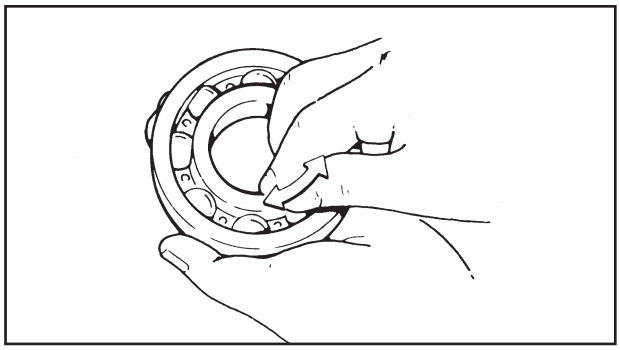

6. Inspect:
   - Rear wheel bearings
     Bearings allow free play in the wheel hub or the wheel does not turn smoothly → Replace.
   - Hub dust cover
     Wear/damage → Replace.
   - Oil seal
     Wear/damage → Replace.

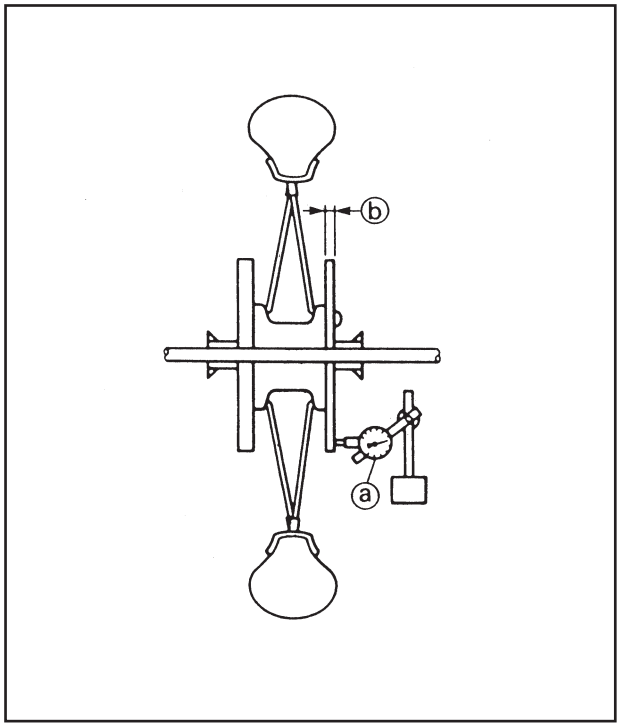

BRAKE DISC INSPECTION

1. Inspect:
   - Brake disc
     Wear/Damage → Replace.
2. Measure:
   - Brake disc deflection (a)
     If over envisaged limits → Verify wheel centring.
     If the wheel centring is correct, replace the brake disc.

Maximum deflection (brake disc):
0.15 mm

Misure at 2 mm from disc edge
   - Brake disc thickness (b)
     If out of specified limits → Replace.

Minimum thickness (brake disc):
4.5 mm

REAR WHEEL ASSEMBLY

1. Install:
   - Wheel spacer
   - Wheel bearing
   - Oil seal
   - Dust cover
   - Wheel bearing
   - Wheel spacer
   - Wheel bearing
   - Hub bearing
   - Oil seal
   - Hub spacer
   - Dampers
   - Hub and driven sprocket

▼▼▼▼▼▼▼▼▼▼▼▼▼▼▼▼▼▼▼▼▼▼▼▼▼▼▼▼▼▼▼▼▼▼

Assembly procedure:

- Install the new bearing, the dust cover and the oil seal by following the disassembly procedures in reverse order.

NOTE:

Use a wrench (1) with an external diameter equal to that of the bearing, dust cover and oil seal.

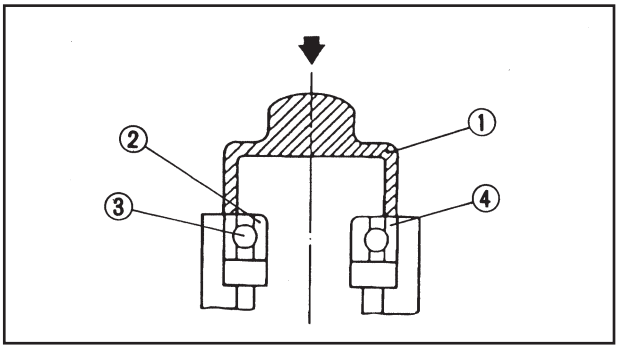

CAUTION:

Do not strike the bearing inner race (2) or balls (3). The contact must only be made with the outer race (4).

▲▲▲▲▲▲▲▲▲▲▲▲▲▲▲▲▲▲▲▲▲▲▲▲▲▲▲▲▲▲▲▲▲▲

REAR WHEEL INSTALLATION

1. Install:
   - Brake disc (1)

Screw (brake disc):
12 Nm (1.2 mkg)

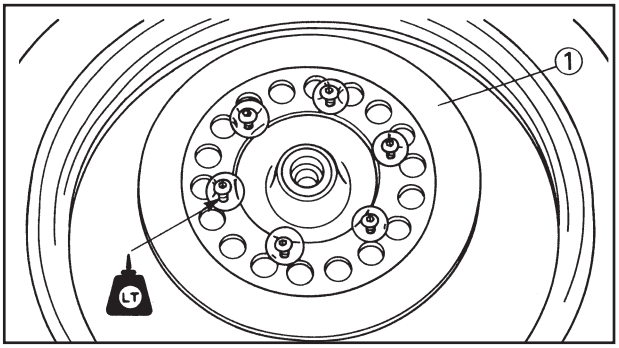

NOTE:

- Apply LOCTITE ® to the threads of brake disc screw.
- Tighten the screws (brake disc) in stage using a crisscross pattern.

2. Install:
   - Hub spacer (1)
   - Driven sprocket (2)
   - Hub and driven sprocket

Screw (driven sprocket):
48 Nm (4.8 mkg)

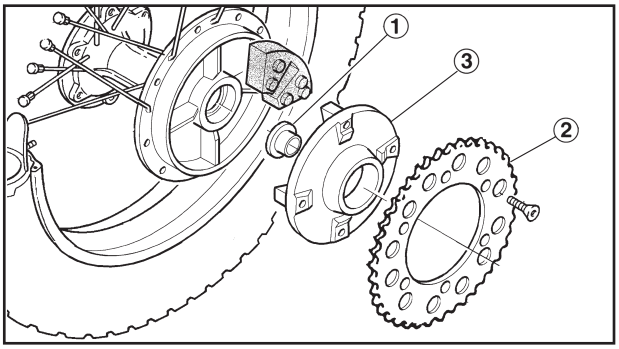

3. Install:
   - Collar

4. Lubricate:
   - Wheel axle
   - Bearings
   - Edge of hub dust cover

	Lithium-base grease

CAUTION:

Check that the brake caliper support has stayed in the correct position on the rear arm.

5. Install:
   - Rear wheel assembly (in the rear arm)
   - Bearing
   - Edge of the hub dust cover

CAUTION:

Check that the brake disc is driving through the brake pads.

6. Install:
   - Drive chain (on the driven sprocket)
   - Rear wheel axle (left side)

CAUTION:

Make sure the collars and chain pullers are positioned correctly.

7. Adjust:
   - Drive chain slack

	Drive chain slack: **30 ~ 40 mm**

Refer to “DRIVE CHAIN SLACK INSPECTION AND ADJUSTMENT” section in Chapter 3.

8. Tighten:
   - Wheel axle nut

	Wheel axle nut: **115 Nm (11.5 mkg)**

WHEEL STATIC BALANCE ADJUSTMENT

NOTE:
- After replacing the tire and/or rim, the wheel static balance should be adjusted.
- Adjust the rear wheel static balance with the brake disc installed.

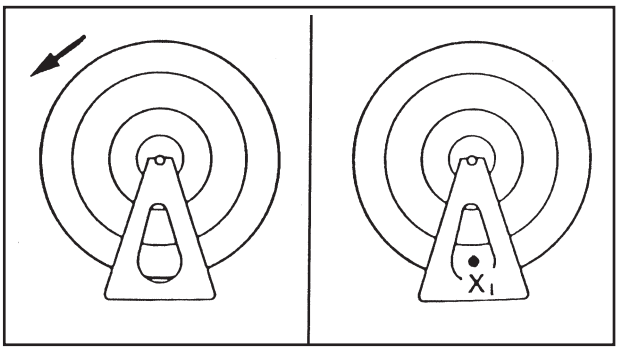

1. Remove:
   - Balancing weight
2. Set:
   - Wheel (on a suitable stand)
3. Find:
   - Heavy spot

Procedure:
a. Spin the wheel and wait for it to rest.
b. Put an "X_1" mark on the wheel's bottom spot.
c. Turn the wheel so that the "X_1" mark is 90° up.
d. Release the wheel and wait for it to rest.
   Put an "X_2" mark on the wheel's bottom spot.
e. Repeat the above b., c., and d. several times until all marks come to the same spot.
f. This spot is the wheel's heavy spot "X".

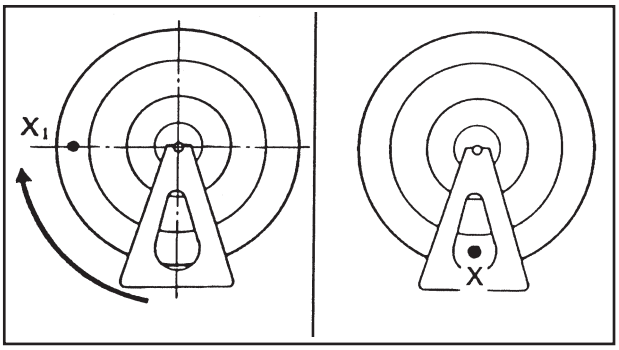

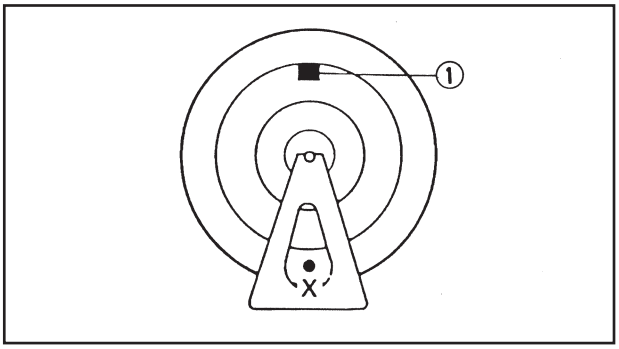

4. Adjust:
   - Wheel static balance

Adjusting steps:
- Install a balancing weight (1) on the rim exactly opposite to the heavy spot "X".

NOTE:
Start with the smallest weight.

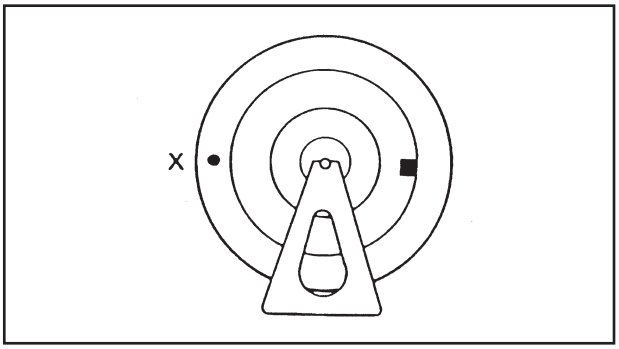

- Turn the wheel so that the heavy spot is 90° up.
- Check that the heavy spot is at rest there. If not, try another weight until the wheel is balanced.

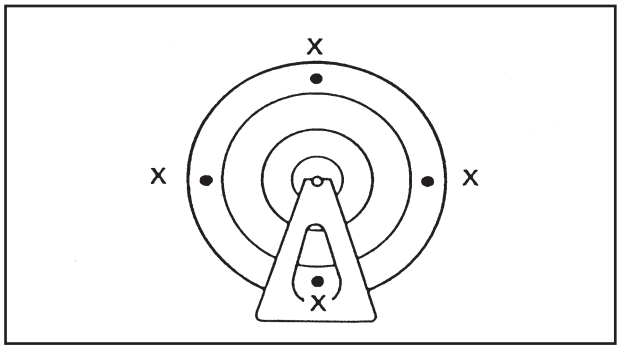

5. Check:
   - Wheel static balance

▼▼▼▼▼▼▼▼▼▼▼▼▼▼▼▼▼▼▼▼▼▼▼▼▼▼▼▼▼▼▼▼

Checking steps:

- Turn the wheel so that it comes to each point as shown.
- Check that the wheel is at rest at each point. If not, readjust the rear wheel static balance.

▲▲▲▲▲▲▲▲▲▲▲▲▲▲▲▲▲▲▲▲▲▲▲▲▲▲▲▲▲▲▲▲

REAR BRAKE

BRAKE PAD

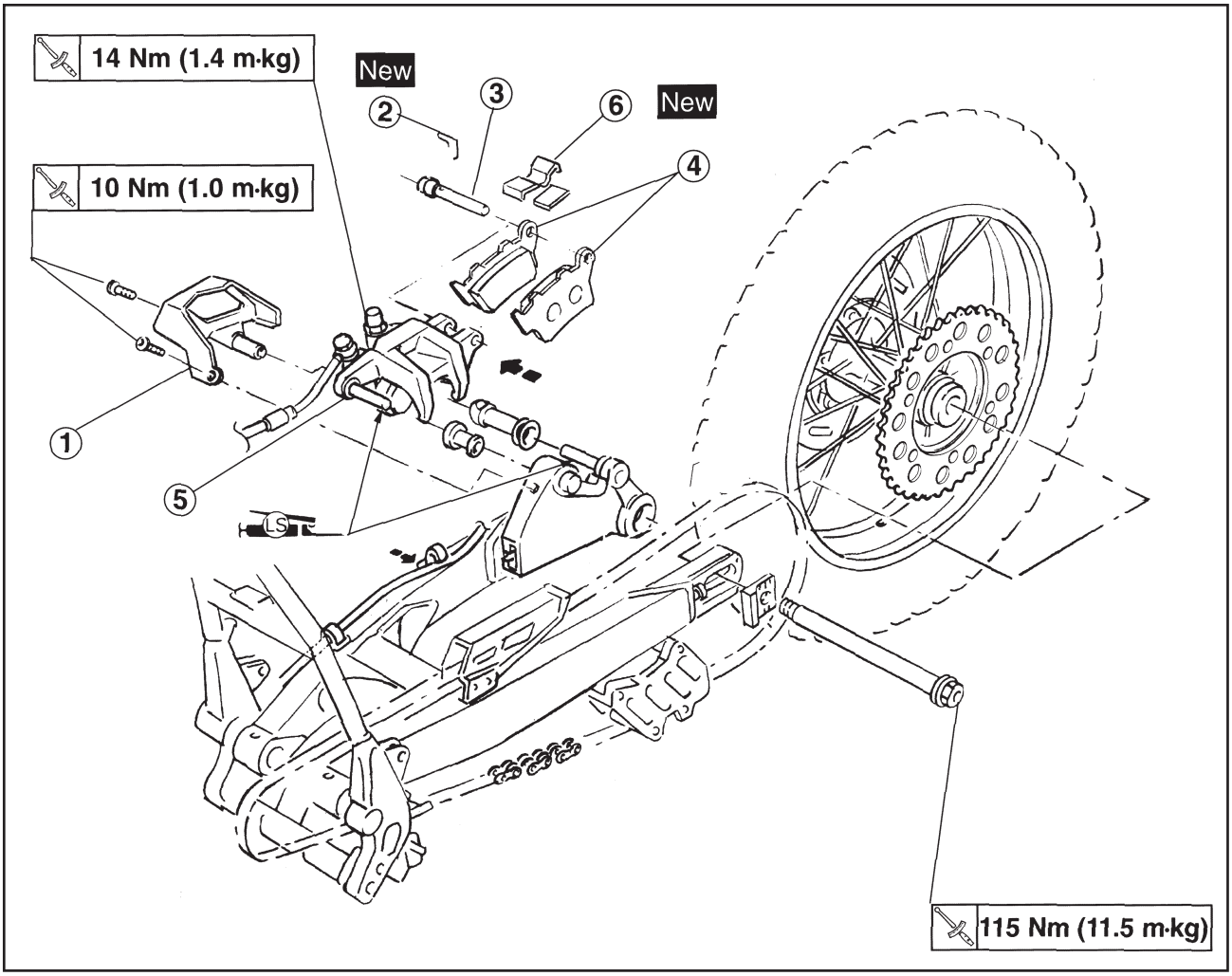

Order	Job name/Part name	Q.ty	Remarks
	Brake pad removal		Remove the parts in order.
	Rear wheel		Refer to “REAR WHEEL REMOVAL” section.
	Brake hose		Remove from clamp.
1	Caliper protector	1	Refer to “BRAKE PAD REPLACEMENT” section.
2	Pad pin retainer	1	
3	Pad pin	1	
4	Brake pad	1	
5	Brake caliper (remove from caliper support)	2	
6	Brake pad support	1	
			Reverse the removal procedure for installation.

CAUTION:

Brake components must not be disassembled. The builder declines every responsibility after brake components disassembly (brake master cylinder or brake caliper) or in case of use of non original parts.

DO NOT:

- **Remove brake components from the motorcycle unless is absolutely necessary.**
- **Use solvents on internal brake components.**
- **Use brake fluid already used for bleeding.**
- **Allow brake fluid to come into contact with the eyes as it may cause injury.**
- **Allow brake fluid to come into contact with painted or plastic parts as it may damage them.**
- **Disconnect any hydraulic connection, otherwise the whole system must be disassembled, drained, cleaned, then properly filled and bled after reassembly.**

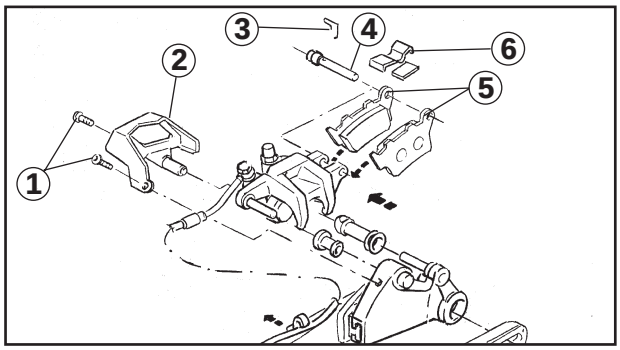

BRAKE PAD REPLACEMENT

NOTE:

It is unnecessary to disassemble the brake hose to replace the pads.

1. Remove:
   - Rear wheel (refer to “REAR WHEEL REMOVAL” section).
   - Bolt (caliper protector) (1)
   - Brake caliper protector (2)
   - Pad pin retainer (3)
   - Brake pad pin (4)
     Remove the caliper in the illustrated direction.
2. Remove:
   - Brake pads (5)
   - Pad support (6)

NOTE:

- If you replace the pads, also replace the pad support.
- If one of the two pads has to be replaced because it is worn, replace both.

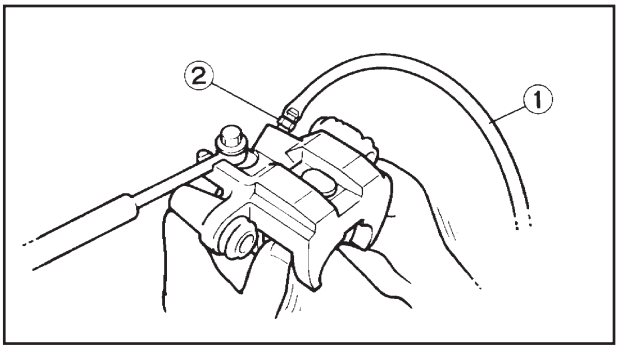

3. Install:
   - Brake pads
   - Pad support

▼▼▼▼▼▼▼▼▼▼▼▼▼▼▼▼▼▼▼▼▼▼▼▼▼▼▼▼▼▼▼▼

Installation procedure:

- Connect the hose (1) firmly to the caliper bleeder screw (2). Place the other end of the hose in an open container.
- Loosen the caliper bleeder screw and push the piston into the caliper with your finger.
- Retighten the bleeder screw (2).

	Caliper bleeder screw: **14 Nm (1.4 mkg)**

- Install the (new) brake pads and (new) pad support.
- Install the caliper (3) and the pad pin (4).
- Install the (new) pin retainer (5)
- Install the caliper protector (6).

	Caliper protector bolt: **10 Nm (1.0 mkg)**

▲▲▲▲▲▲▲▲▲▲▲▲▲▲▲▲▲▲▲▲▲▲▲▲▲▲▲▲▲▲▲▲

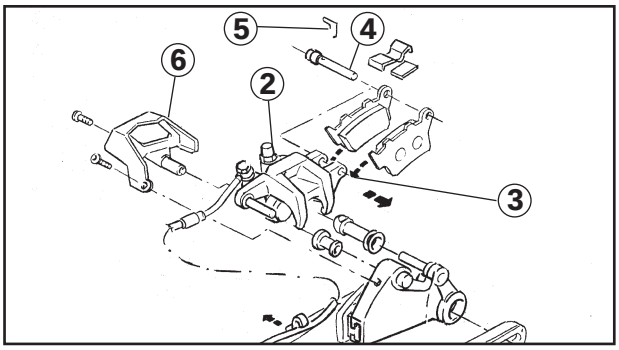

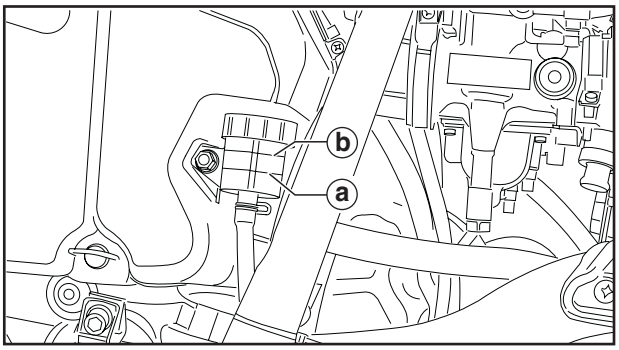

4. Check:
   - Brake fluid level
     Refer to “BRAKE FLUID INSPECTION” section in Chapter 3.
   (a) Minimum level mark “MIN”
   (b) Maximum level mark “MAX”

5. Check:
   - Brake pedal operation
     Pedal soft and spongy → Bleed air from brake circuit.
     Refer to “AIR BLEEDING (HYDRAULIC BRAKE SYSTEM)” section in Chapter 3.

MASTER CYLINDER

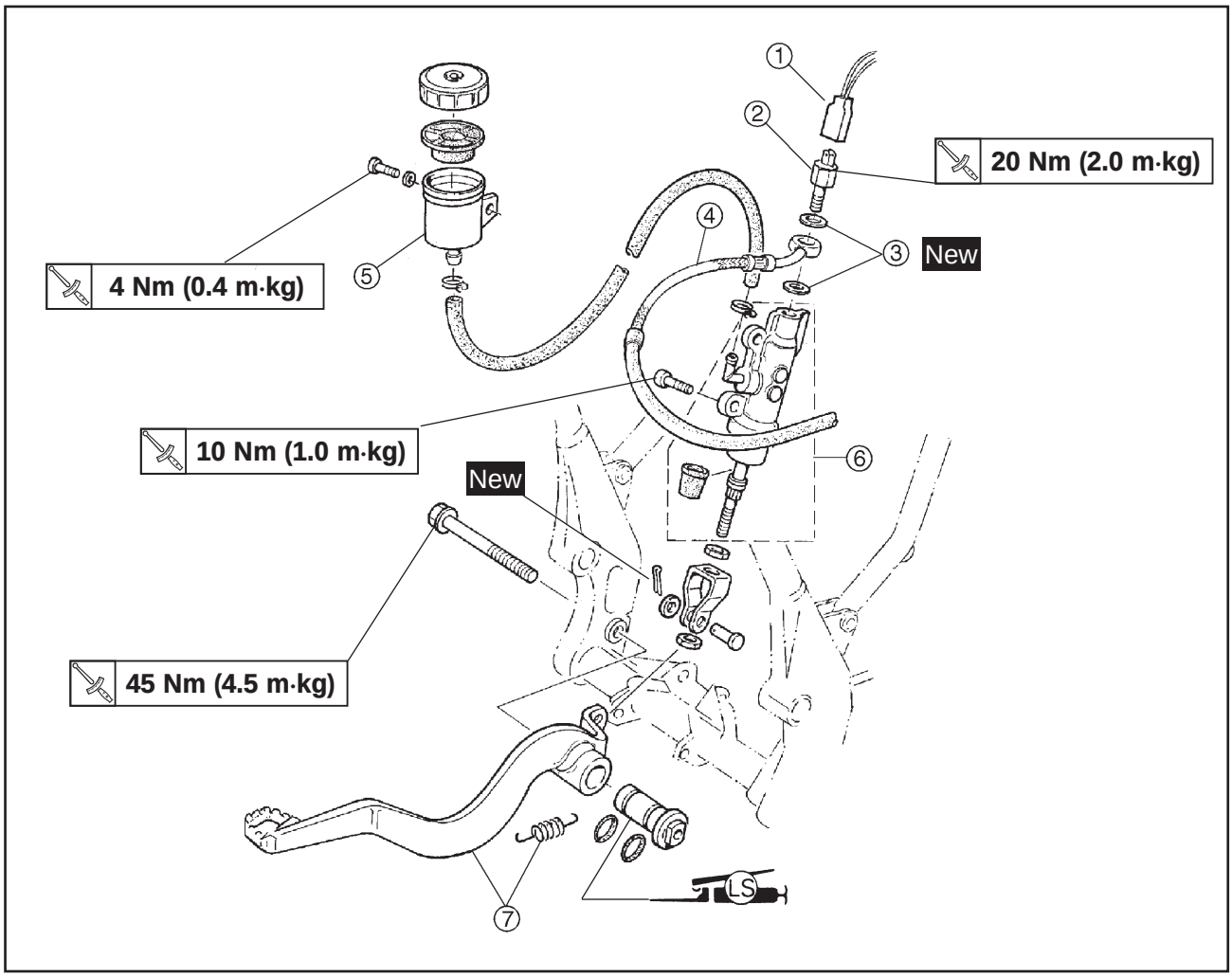

Order	Job name/Part name	Q.ty	Remarks
	Master cylinder removal		Remove the parts in order.
	Brake fluid		Drain.
1	Rear stop switch connector	1	Refer to “MASTER CYLINDER INSTALLATION” section.
2	Rear stop switch	1	
3	Plain washer	2	
4	Brake hose	1	
5	Brake fluid reserve tank	1	
6	Brake master cylinder	1	
7	Brake pedal/spring	1/1	Refer to “BRAKE PEDAL REMOVAL” section.
			Reverse the removal procedure for installation.

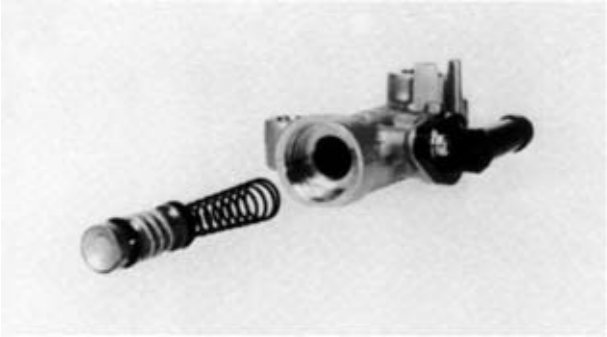

MASTER CYLINDER INSPECTION

1. Inspect:
   - Master cylinder assembly
     Wear/scratches → Replace the master cylinder assembly.
   - Master cylinder body
     Cracks/damage → Replace the master cylinder assembly.
   - Fluid delivery passage (master cylinder)
     Obstruction → Clean with a jet of compressed air.
2. Inspect:
   - Master cylinder piston unit
     Scratches/wear/damage → Replace the master cylinder assembly.

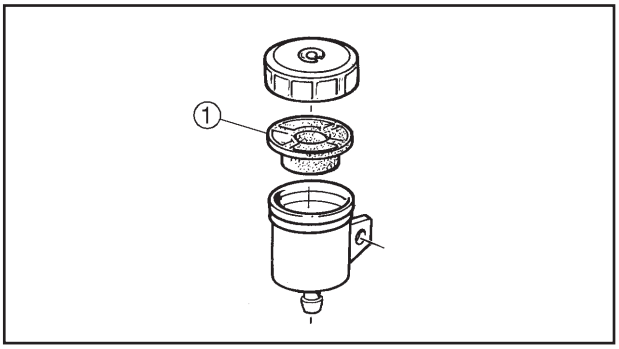

3. Inspect:
   - Diaphragm (1)
     Wear/damage → Replace.
4. Inspect:
   - Brake hose
     Cracks/wear/damage → Replace.

MASTER CYLINDER ASSEMBLY

WARNING

- **All internal brake components should be cleaned and lubricated with new brake fluid only before installation.**

Recommended brake fluid:
DOT 4

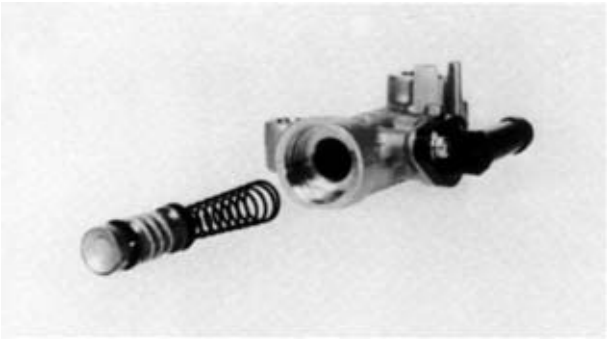

- **In case of non correct operation of the brake master cylinder, replace the master cylinder assembly.**

1. Install:
   - Spring
   - Master cylinder piston unit

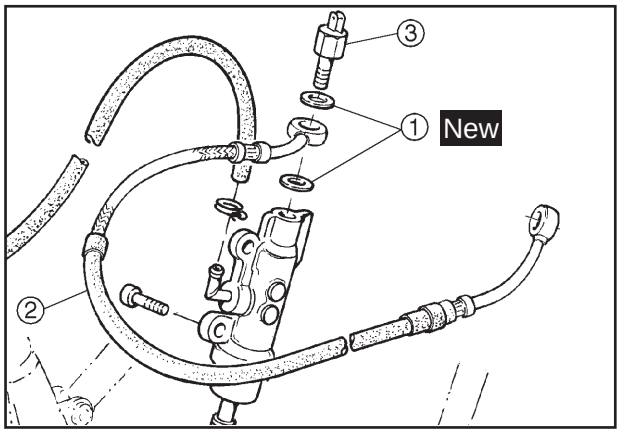

MASTER CYLINDER INSTALLATION

1. Install:
   - Brake pedal (refer to “BRAKE PEDAL REMOVAL” section in this Chapter).

NOTE:

Lubricate the pin of the brake pedal with lithium-base grease.

- Master cylinder
- Brake fluid reserve tank
- Plain washers (1) (new)
- Brake hose (2)
- Stop switch (to mount the brake hose) (3)

Brake switch (brake hose):
20 Nm (2.0 mkg)
Master cylinder mounting bolt:
10 Nm (1.0 mkg)
Reserve tank mounting bolt:
4 Nm (0.4 mkg)

2. Fill:
   - Brake fluid reserve tank

Recommended brake fluid:
DOT 4

CAUTION:

Brake fluid may deteriorate painted surfaces or plastic parts. Always clean up spilled fluid immediately.

WARNING

- **Use only designated quality brake fluid. Otherwise, the rubber seals may deteriorate, causing leakage and poor brake performance.**
- **Refill with the same type of brake fluid: mixing fluids may result in a harmful chemical reaction and lead to poor performance.**
- **Be careful that water does not enter the significantly lower the boiling point of the fluid may result in vapor lock.**

3. Air bleed:
   - Brake system
     Refer to “AIR BLEEDING (HYDRAULIC BRAKE SYSTEM)” in Chapter 3.

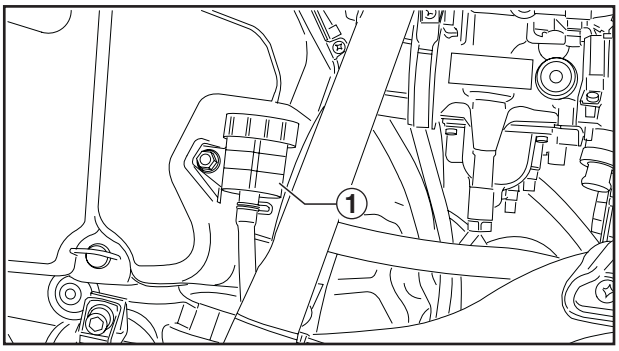

4. Inspect:
   - Brake fluid level
     Lower than “MIN” mark (1) ➔ Fill.
     Refer to “BRAKE FLUID INSPECTION” section in Chapter 3.

   (1) Minimum level mark “MIN”

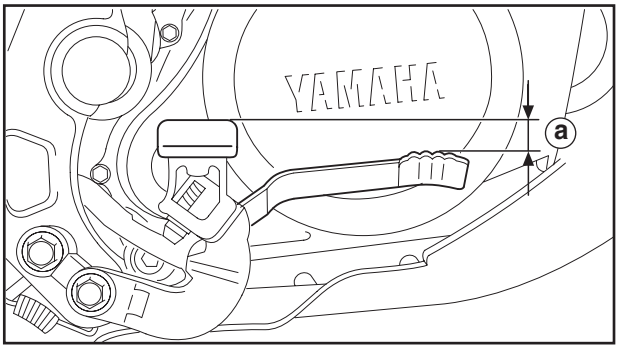

5. Adjust:
   - Brake pedal height (a)
     (below the top of the footrest)

Brake pedal height:
10 mm

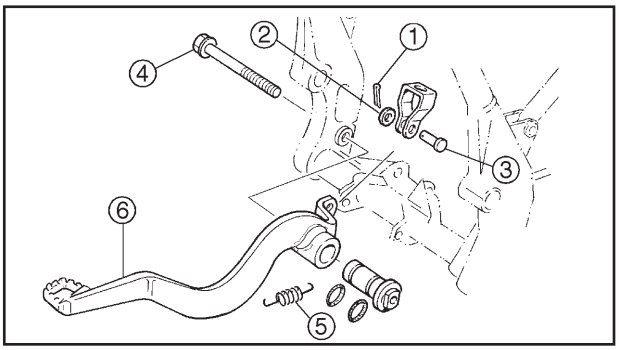

BRAKE PEDAL REMOVAL

1. Remove:
   - Split pin (1) (new)
   - Plain washer (2)
   - Pin (3)
2. Unscrew:
   - Bolt (4)
3. Remove:
   - Spring (5)

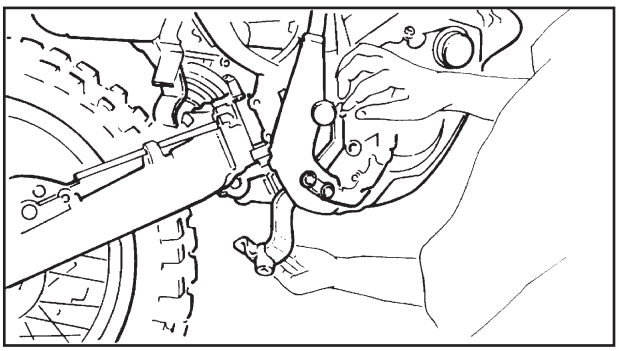

4. Remove:
   - Brake pedal (6) from chassis

NOTE:
Pull the brake pedal from the lower part of the chassis, causing it to rotate progressively as it comes away.

BRAKE CALIPER

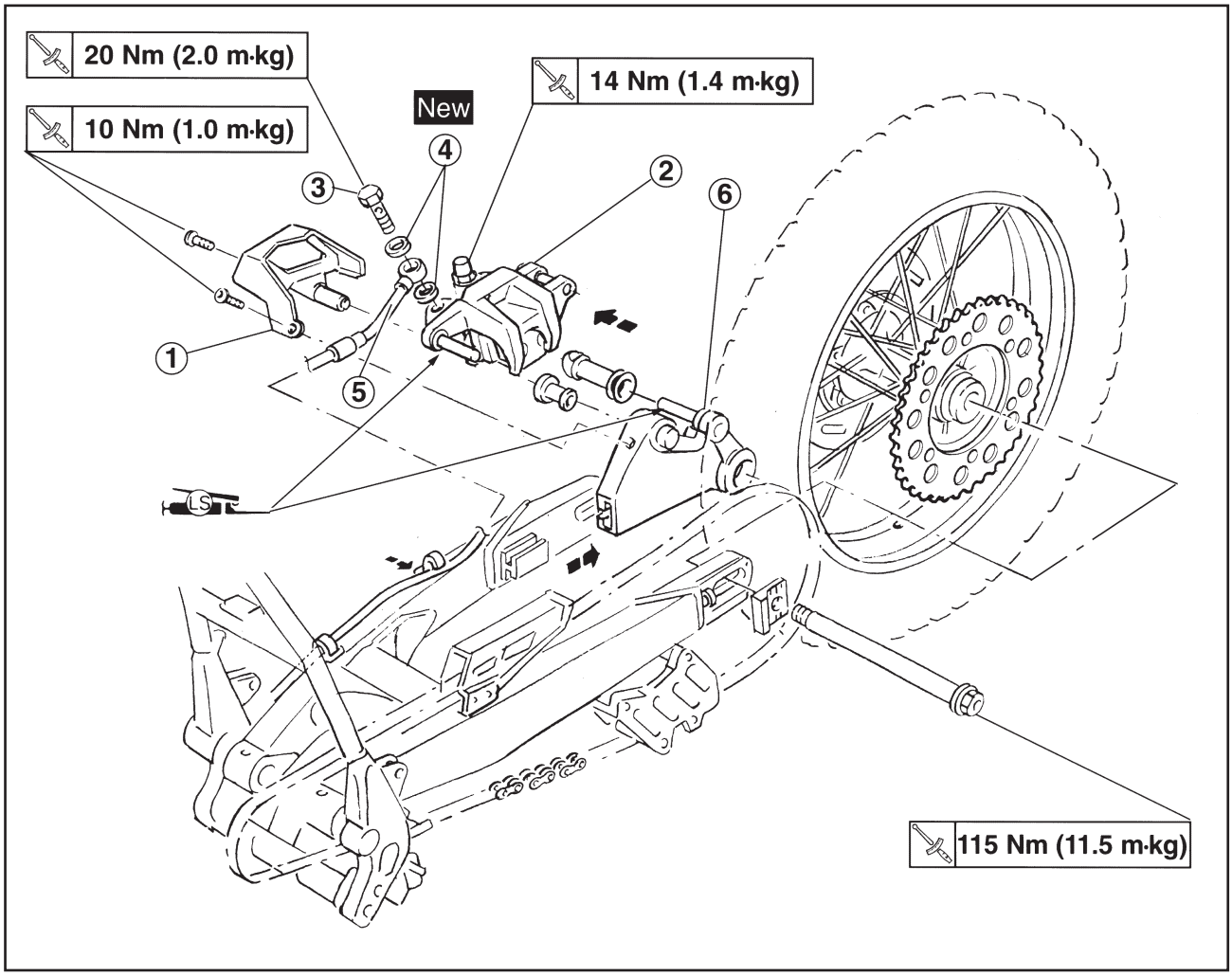

Order	Job name/Part name	Q.ty	Remarks
	Caliper removal		Remove the parts in order.
	Rear wheel		Refer to “REAR WHEEL REMOVAL” section.
	Brake fluid		Drain.
	Brake hose		Remove from clamp.
1	Caliper protector	1	
2	Brake caliper	1	Remove from caliper support.
3	Union bolt	1	Refer to “BRAKE CALIPER INSTALLATION” section.
4	Plain washer	2	
5	Brake hose	1	
6	Brake pad support	1	
			Reverse the removal procedure for installation.

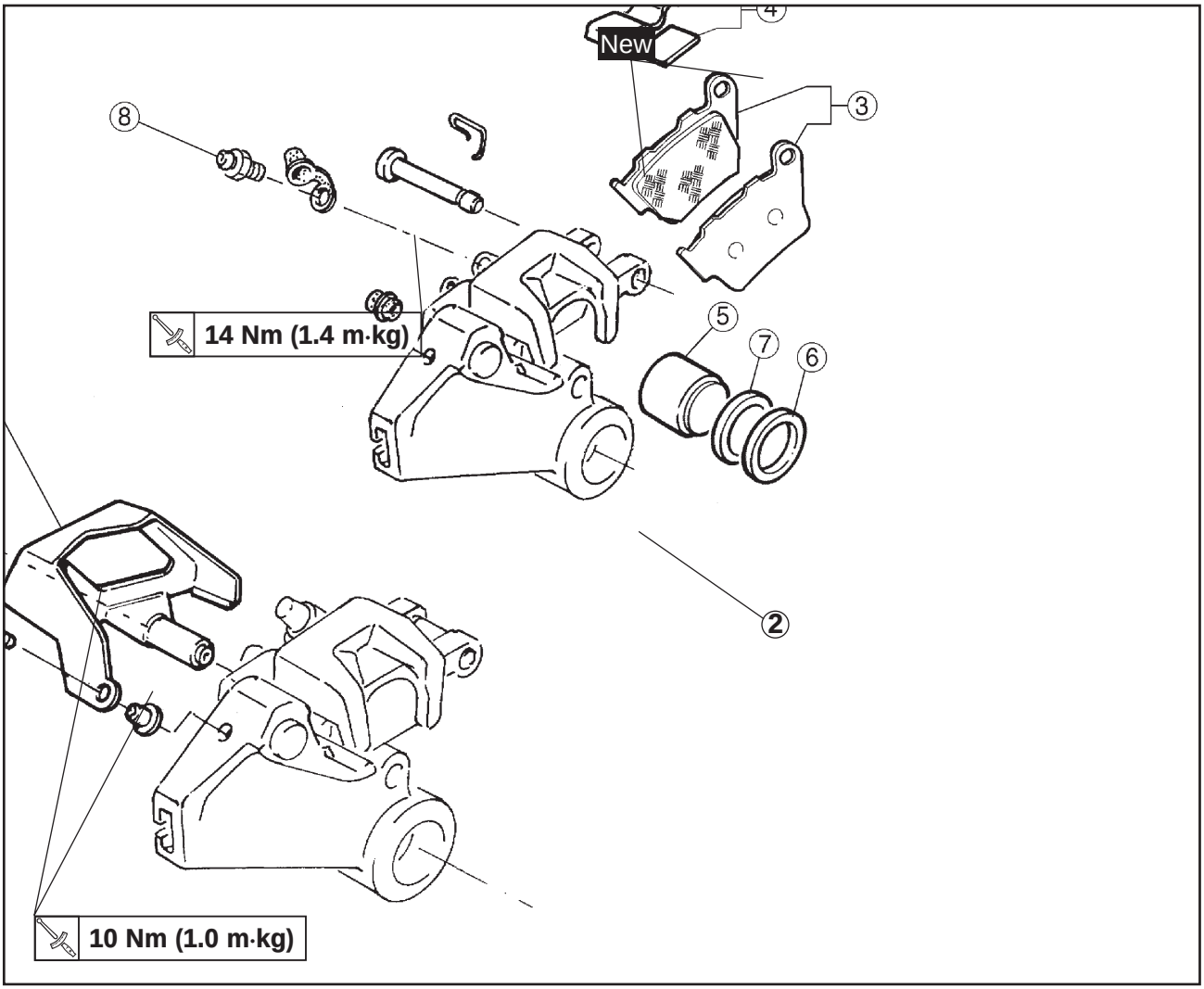

Order	Job name/Part name	Q.ty	Remarks
	Caliper disassembly		Remove the parts in order.
1	Caliper protector	1	Refer to “BRAKE PAD” section.
2	Brake pad support	1	
3	Brake pad	2	
4	Pad support	1	Refer to “BRAKE CALIPER DISASSEMBLY/ASSEMBLY” section.
5	Caliper piston	1	
6	Dust seal	1	
7	Piston seal	1	
8	Bleed screw	1	
			Reverse the removal procedure for installation.

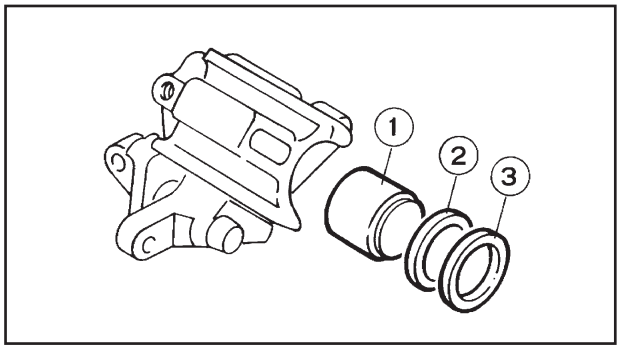

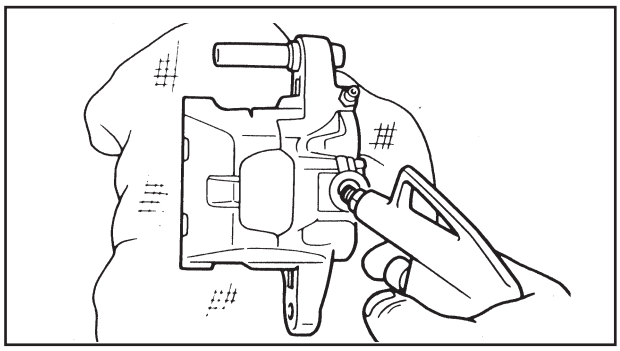

BRAKE CALIPER DISASSEMBLY

1. Remove:
   - Brake caliper piston (1)
   - Dust seal (3)
   - Piston seal (2)

▼▼▼▼▼▼▼▼▼▼▼▼▼▼▼▼▼▼▼▼▼▼▼▼▼▼▼▼▼▼▼▼

Removal procedure:

- Blow compressed air into the hose joint opening to force out the caliper piston from the brake caliper body.

WARNING

- **Never try to pry out the caliper piston.**
- **Cover the caliper piston with a rag. Be careful not to get injured when the piston is expelled from the master cylinder.**

- Remove the piston seal

▲▲▲▲▲▲▲▲▲▲▲▲▲▲▲▲▲▲▲▲▲▲▲▲▲▲▲▲▲▲▲▲

CALIPER INSPECTION

Recommended programme for the replacement of brake system components:	
Brake pads	**When necessary**
Brake hose	**Every four years**
Brake fluid	**Replace every 24,000 km or 24 months and whenever the brake is disassembled.**

WARNING

All internal brake components should be cleaned and lubricated with new brake fluid only before installation. Do not use solvents to prevent sealing elements from becoming misshapen or swollen.

1. Inspect:
   - Caliper piston
     Scratches/wear/rust → Replace caliper assembly.
   - Caliper cylinder
     Scratches/wear → Replace caliper assembly.
   - Caliper
     Cracks/damaged → Replace.

- Fluid delivery passage (caliper)
  Obstruction → Clean with compressed air.

WARNING

In case of non correct operation of the brake caliper, replace the brake caliper assembly.

BRAKE CALIPER ASSEMBLY

WARNING

- **All internal brake components should be cleaned and lubricated with new brake fluid only before installation.**

Liquido freni raccomandato:
DOT 4

- **In case of non correct operation of the brake caliper, replace the brake caliper assembly.**

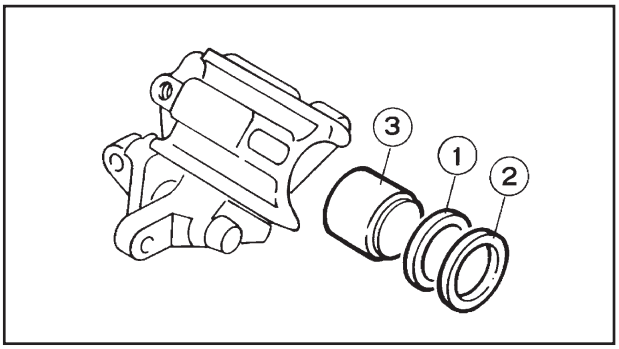

1. Install:
   - Piston seal (1)
   - Dust seal (2)
   - Caliper piston (3)

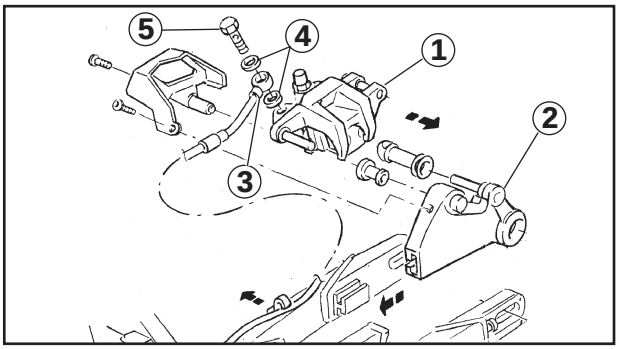

CALIPER INSTALLATION

1. Install:
   - Brake caliper (1)
   - Caliper support (2)
   - Brake hose (3)
   - Plain washers (4) (new)
   - Union bolt (5)

Union bolt:
20 Nm (2.0 mkg)

- Caliper protector

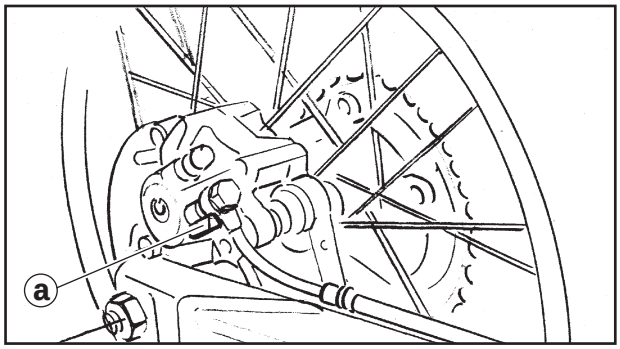

CAUTION:

Check that the brake hose has stayed in correct position with the pipe-fitting matching the projection (a) of the caliper.

WARNING

Check that the brake hose routing is correct. Refer to "CABLE ROUTING" section.

2. Fill:
   - Brake fluid reserve tank

Recommended brake fluid:
DOT 4

CAUTION:

Brake fluid may deteriorate painted surfaces or plastic parts. Always clean up spilled fluid immediately.

WARNING

- **Use only designated quality brake fluid. Otherwise, the rubber seals may deteriorate, causing leakage and poor brake performance.**
- **Refill with the same type of brake fluid: mixing fluids may result in a harmful chemical reaction and lead to poor performance.**
- **Be careful that water does not enter the significantly lower the boiling point of the fluid may result in vapor lock.**

3. Air bleed:
   - Brake system
     Refer to "AIR BLEEDING (HYDRAULIC BRAKE SYSTEM)" section in CHAPTER 3.

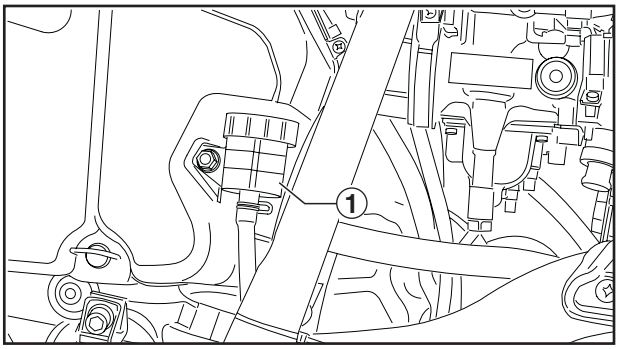

4. Inspect:
   - Brake fluid level
     Lower than “MIN” mark (1) ➔ Fill.
     Refer to “BRAKE FLUID INSPECTION” section in Chapter 3.

(1) Minimum level mark “MIN”

FRONT FORK

FRONT FORK REMOVAL

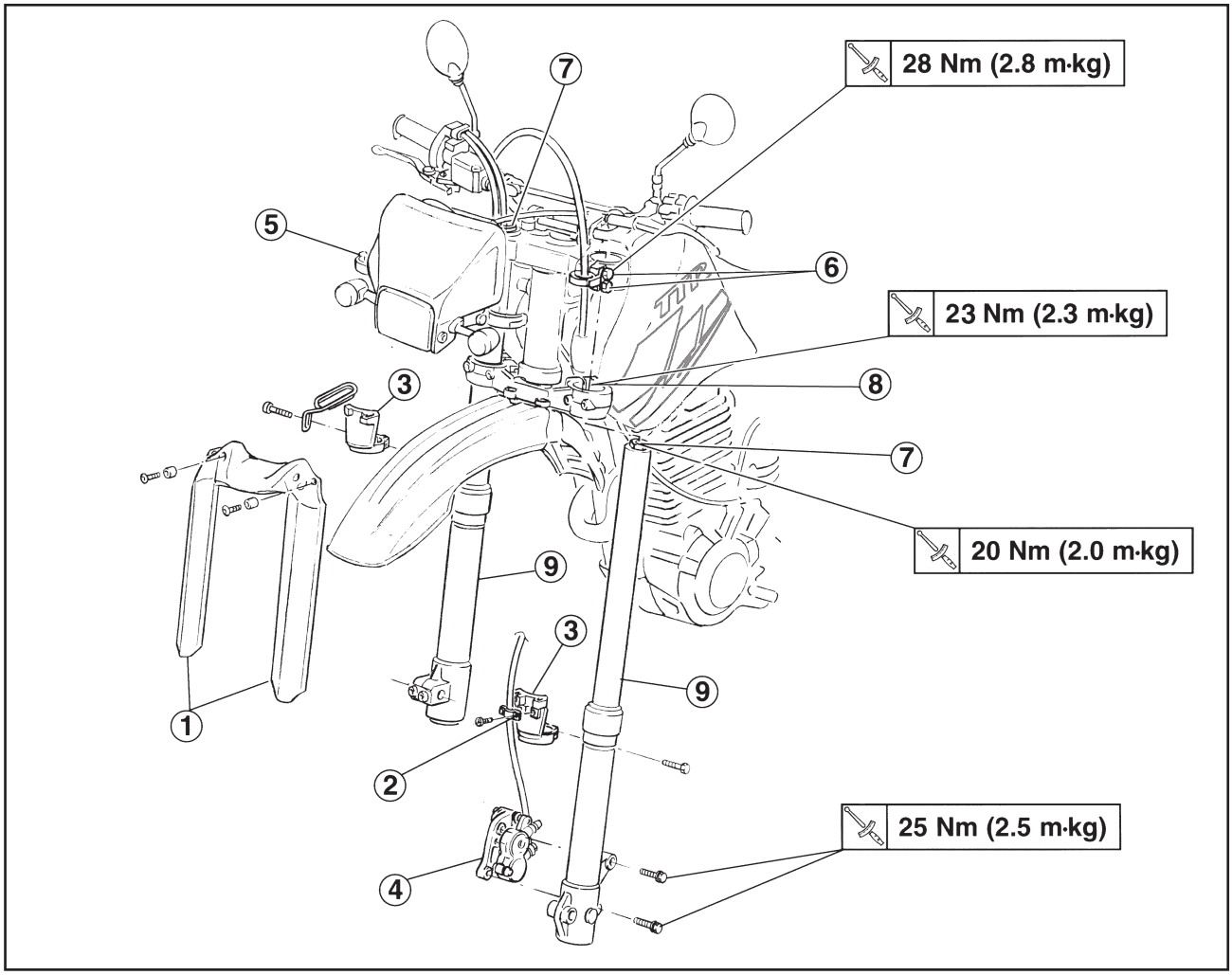

Order	Job name/Part name	Q.ty	Remarks
	Front fork removal		Remove the parts in order.
	Front wheel		Refer to “FRONT WHEEL” section.
1	Inner tube protector	1	
2	Brake hose guide	1	
3	Protector guide	2	
4	Brake caliper assembly	1	
5	Cowling (displace)	1	Refer to "FRONT FORK INSTALLATION" section.
6	Pinch bolt (upper bracket)	4	
7	Cap bolt (loosen)	2	
8	Pinch bolt (under bracket) (loosen)	4	
9	Fork leg	2	
			Reverse the removal procedure for installation.

FRONT FORK DISASSEMBLY

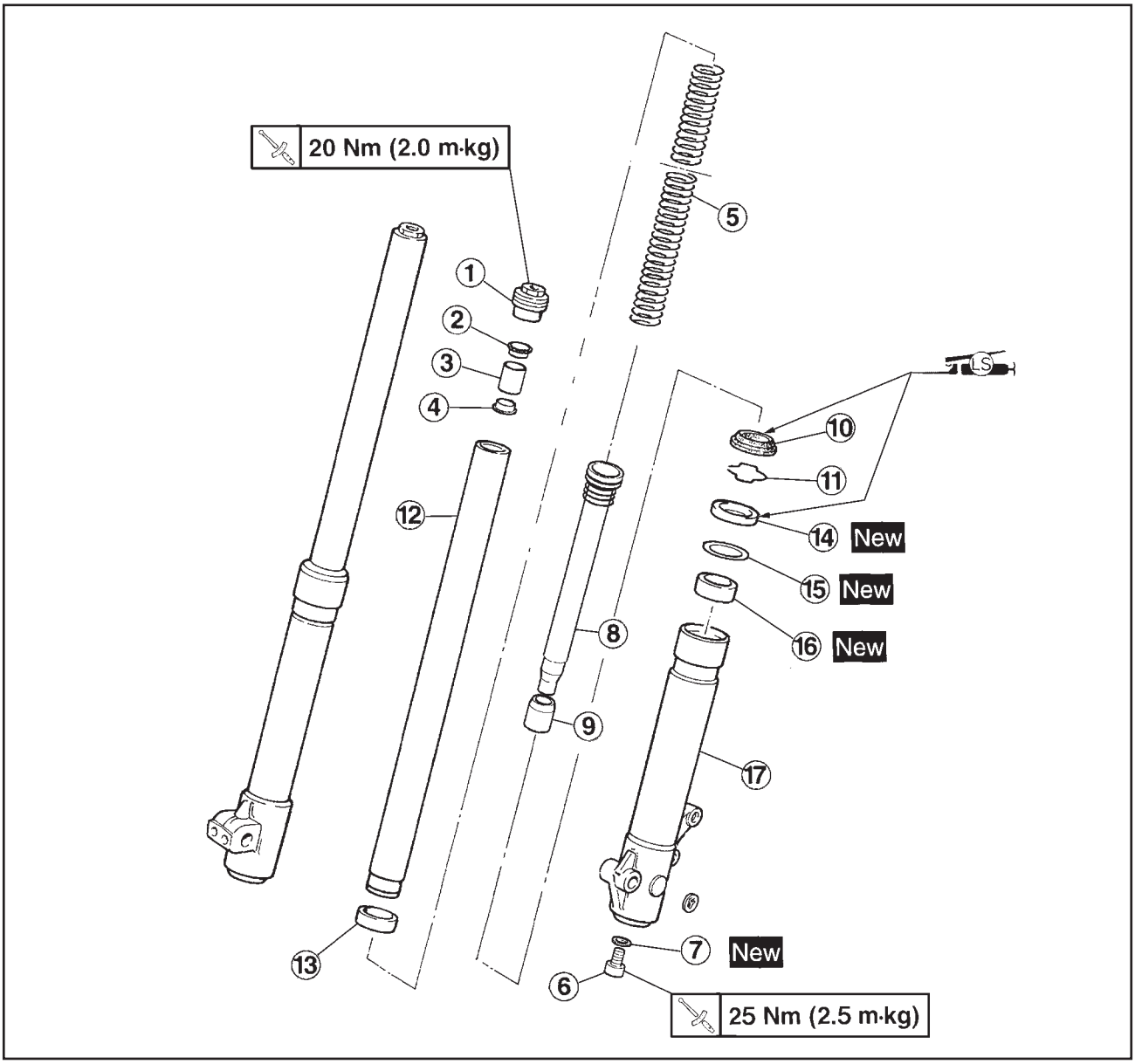

Order	Job name/Part name	Q.ty	Remarks
	Front fork disassembly		Remove the parts in order. Refer to “FRONT FORK REMOVAL/INSTALLATION”.
1	Cap bolt	1	Refer to “OIL REPLACEMENT” section.
2	Seat	1	
3	Spacer	1	
4	Seat	1	
5	Fork spring	1	
6	Bolt	1	Refer to “SEAL AND BUSH REPLACEMENT” section.
7	O-ring	1	
8	Damper adjusting cylinder	1	
9	Taper spindle	1	
10	Dust seal	1	
11	Snap ring	1	

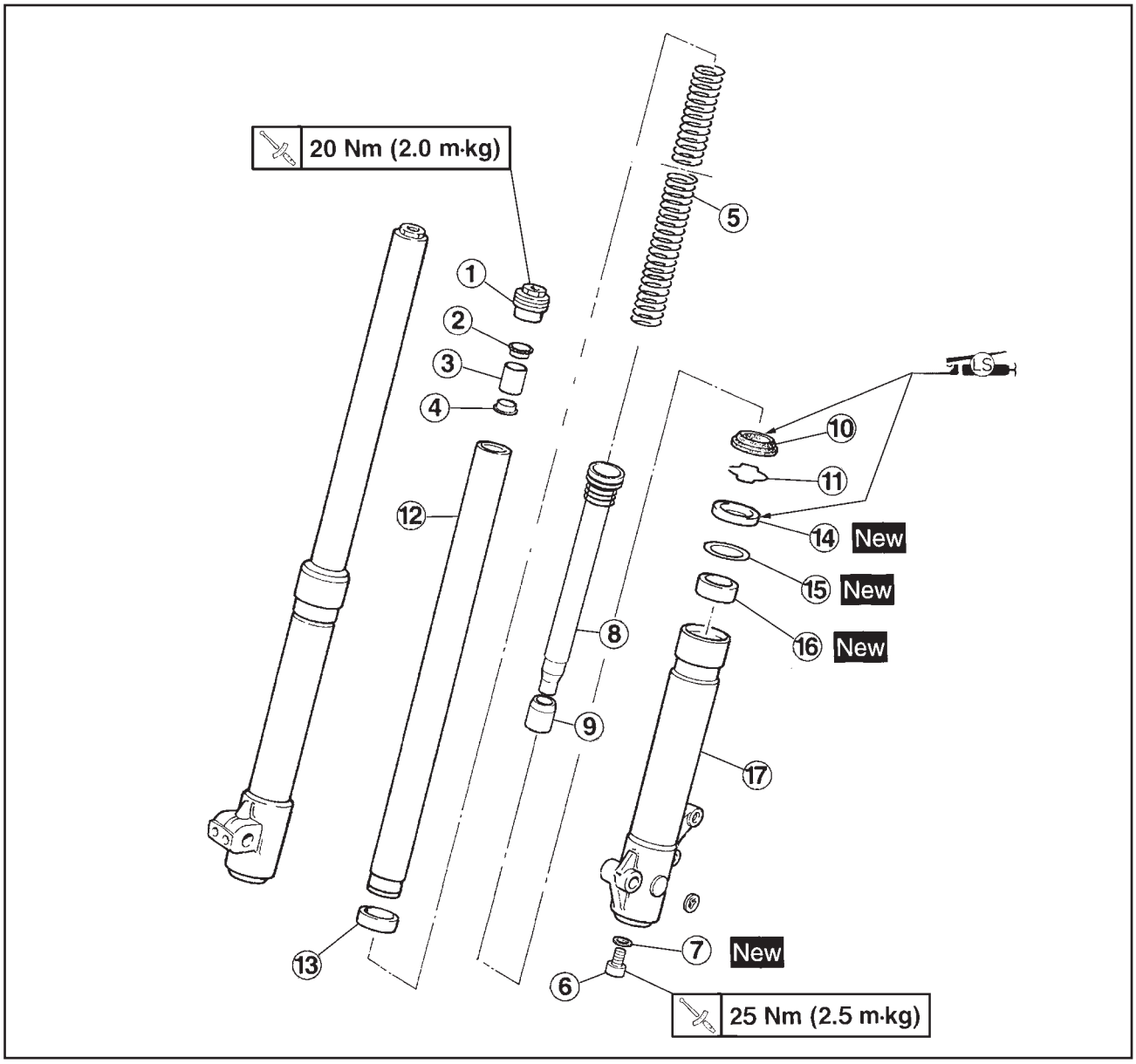

Order	Job name/Part name	Q.ty	Remarks
12	Inner tube	1	Refer to “SEAL AND BUSH REPLACEMENT” section.
13	Inner tube bushing	1	
14	Oil seal	1	
15	Washer	1	
16	Outer tube bushing	1	
17	Outer tube	1	
			Reverse the removal procedure for installation.

OIL CAPACITY (IN EACH FORK LEG): 650 cm^3	
RECOMMENDED OIL: Liqui Moly Racing suspension oil SAE 7,5	
FRONT FORK OIL LEVEL	
STANDARD	180 mm
MINIMUM	190 mm
MAXIMUM	170 mm
From top of inner tube with inner tube fully compressed without spring.	
MINIMUM FORK SPRING FREE LENGTH: 530 mm	
INNER TUBE BENDING LIMIT: 0.2 mm	

FRONT FORK REMOVAL

WARNING

Securely support the motorcycle so there is no danger of it falling over.

1. Park the motorcycle on a level surface.
2. Raise the front wheel by placing a suitable support under the engine.
3. Remove:
   - Front wheel
     Refer to “FRONT WHEEL REMOVAL” section.
4. Remove:
   - Inner tube protector
   - Protector guide
   - Gear unit assembly and cable
   - Brake caliper and hose
5. Loosen:
   - Cap bolt
   - Pinch bolt (upper and lower bracket)

OIL REPLACEMENT

NOTE:

The quality of the fork oil is of fundamental importance for obtaining the maximum performance and functioning. For this reason it needs to be replaced after the first **3÷4** hours to eliminate any residues due to the adaptation of the internal components and successively every **8 hours** for motor-cross and every **20 hours** for enduro.

CAUTION:

Using oil with different technical specifications will compromise the good efficiency of the fork.

1. Generally clean the front fork.
2. Loosen:
   - Cap bolt (inner tube)
3. Remove:
   - Fork leg
4. Unscrew:
   - Cap bolt (1) (completely)

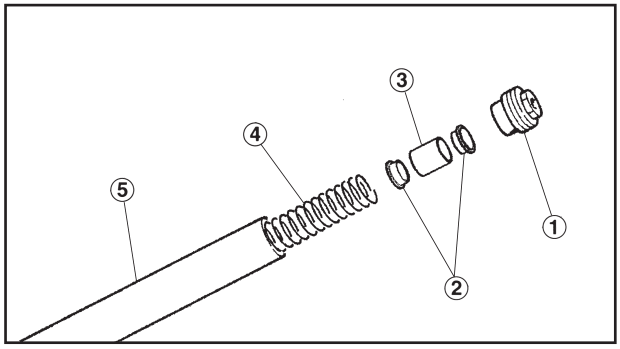

NOTE:

Place the components in a clean area.

5. Withdraw:
   - Seat (2)
   - Spacer (3)
   - Spring (4) (from the inner tube (5))

NOTE:

The spring, being immersed in oil could cause oil to drip onto the work surface when withdrawn. It is advisable therefore to withdraw it slowly and to dry it with a clean cloth.

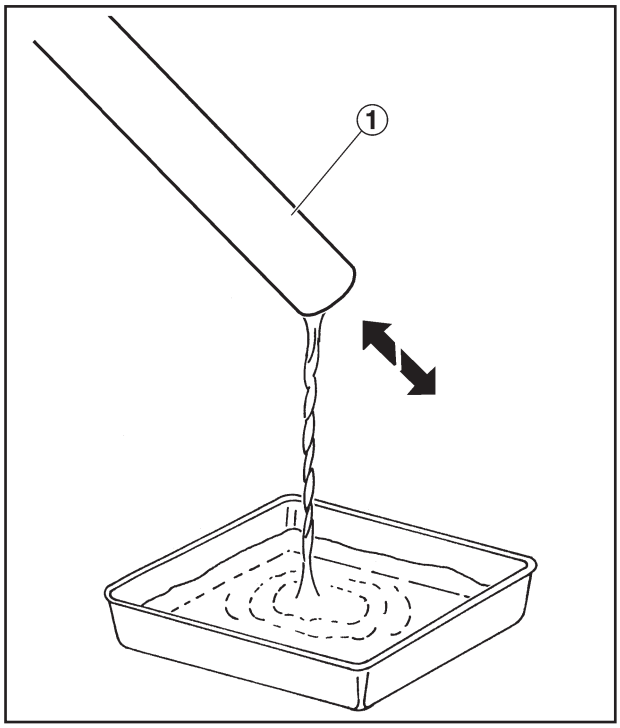

6. Pour the oil into a tray whilst at the same time moving the inner tube (1) backwards and forwards.

CAUTION:

In order not to cause damage to the environment collect the used oil and take it to a collection centre.

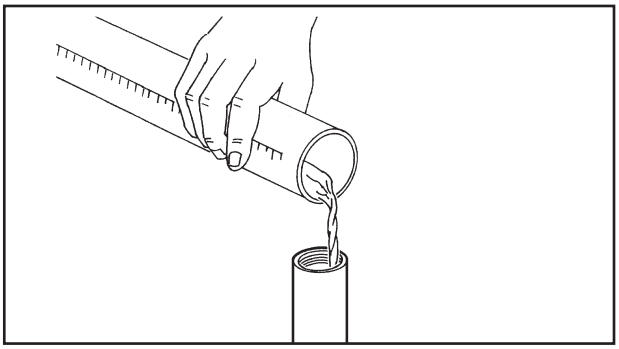

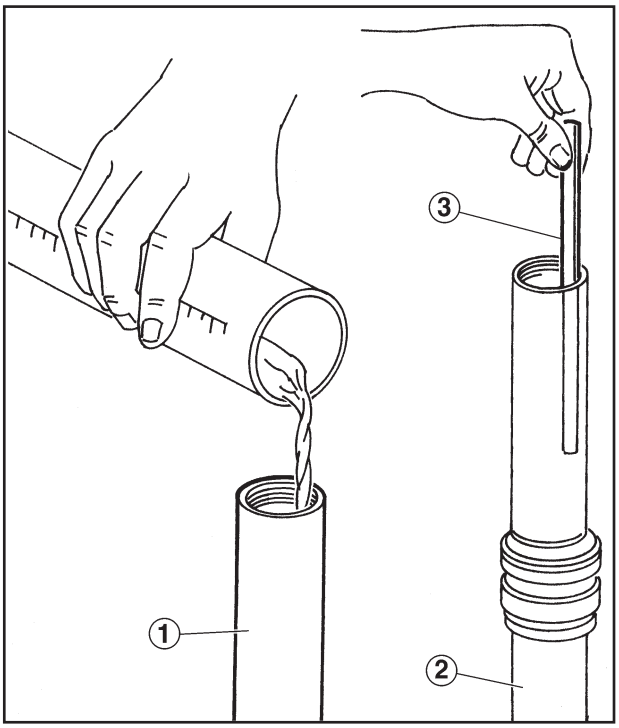

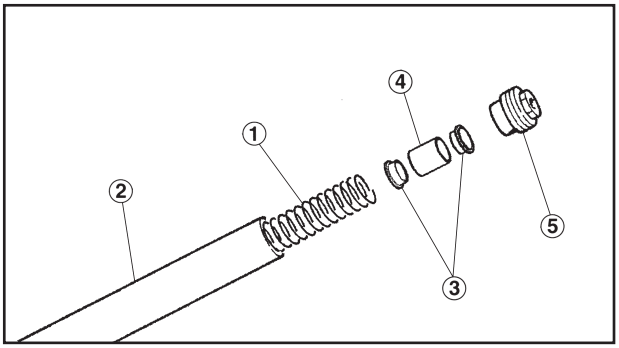

7. Fill:
   - Part of the new oil (with the fork leg in a vertical position)

Recommended oil:
Liqui Moly Racing suspension oil SAE 7,5

8. Using the inner tube pump back and forth until a regular drag is felt on the return stroke.
9. With the fork leg in a perfectly upright position, insert the inner tube (1) in the outer tube (2) completely to the end of the stroke.
10. Finish topping up the oil bringing it to the prescribed level from the upper edge measured with a graduated dipstick or ruler (3).

Recommended oil:
Liqui Moly Racing suspension oil SAE 7,5

Oil level:

Standard	**180 mm**
Minimum	**190 mm**
Maximum	**170 mm**

From top of inner tube with inner tube fully inserted without spring.

11. Insert:
    - Spring (1) (into the inner tube (2))
    - Seat (3)
    - Spacer (4)

NOTE:
Usually there is no particular sense in which the spring is mounted and so it may be inserted from either end. If there is a hem, however mount it keeping the hemmed parts towards the top.

12. Screw:
    - Cap bolts (5)
      (on inner tube, without tighten)
13. Install:
    - Fork leg

14. Tighten:
- Pinch bolt (upper and lower bracket)

Pinch bolt (upper bracket):
28 Nm (2.8 mkg)
Pinch bolt (under bracket):
23 Nm (2.3 mkg)

NOTE:
Always tighten the lower pinch bolt (to the prescribed torque) and then the upper one (to the prescribed torque) and then retighten the lower one (to the prescribed torque).

15. Tighten:
- Cap bolt (on inner tube)

Cap bolt (on inner tube):
20 Nm (2.0 mkg)

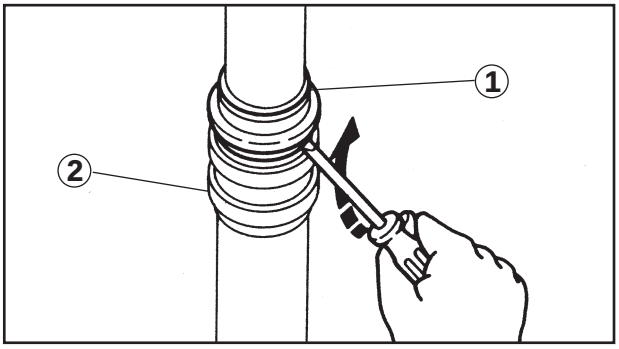

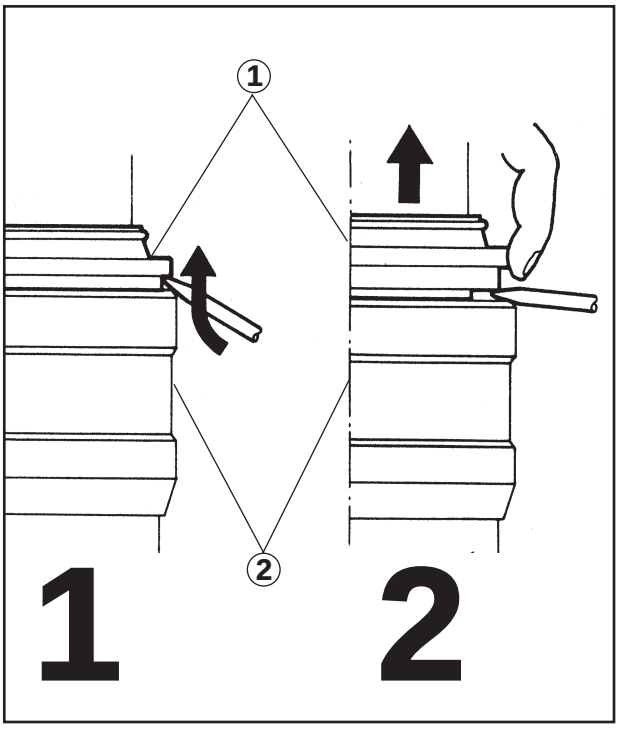

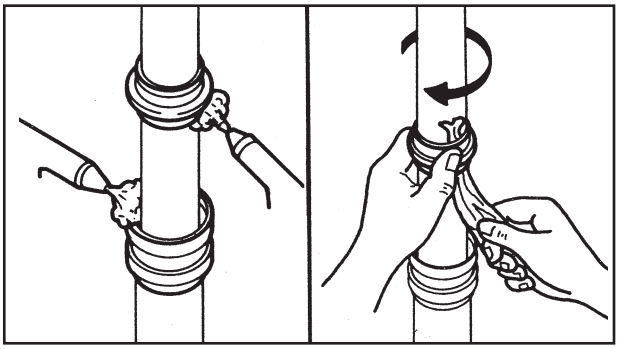

CLEANING THE DUST SEAL

NOTE:

After using the motorcycle it is necessary to clean the dust seal carefully in order to maintain the fork at maximum efficiency.
In fact, if dust infiltrates to the inside of the dust seal it can compromise the smoothness and therefore the sensitivity of the fork, and also cause the premature wear of the underlying oil seal.
Just a few simple operations then, guided by the following indications are necessary to maintain the optimum functioning of the fork with time.

1. With a screwdriver prise the dust seal (1) from the oil seal seat (2) and then withdraw it using force.

2. Using a low pressure jet of compressed air clean the inside of the dust seal and the oil seal seat.

3. Insert the edge of a cloth under the lip and keeping the cloth steady, carefully clean the lip by rotating the dust seal.

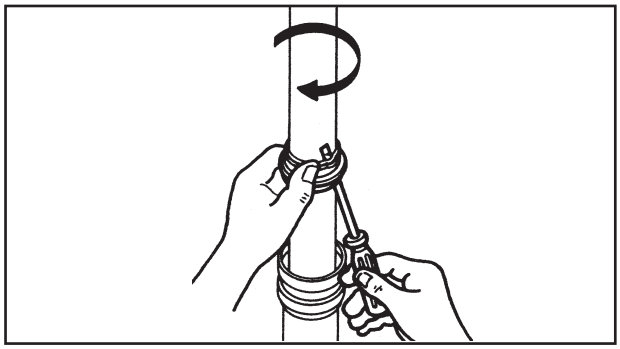

4. Using a small screwdriver take a small amount of silicon grease and insert it under the lip paying attention not to scratch it.
   Lubricate the dust seal by rotating it in such a manner that the grease is distributed in the inner part of the lip.

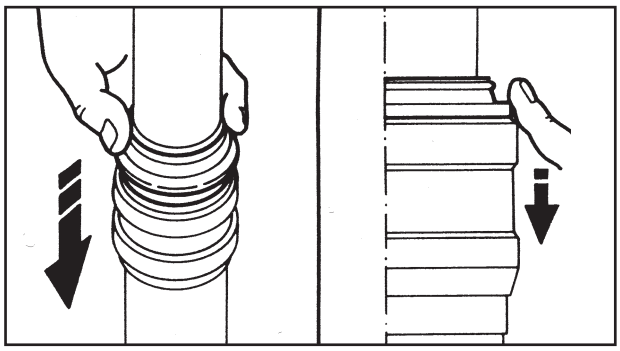

5. Remount the dust seal inserting it with force into the oil seal seat.

CAUTION:

Check that the oil seal housing edge of the dust seal adheres perfectly to the oil seal seat.

SEAL AND BUSH REPLACEMENT

NOTE:

To ensure maximum efficiency to the fork and therefore a longer duration and greater safety, every year (unless there are leakages) it is necessary to replace all the seals and slide bushes.
To carry out this operation it is recommended to use the proper tools.

CAUTION:

To remove the fork leg from the steering unit, the cap bolt, the spring and to drain and refill the oil, follow the procedures indicated in the preceding pages scrupulously.

1. Drain:
   - Fork leg oil
     Refer to “OIL REPLACEMENT”section.
2. Clamp:
   - Fork leg in a vice (in a horizontal position)

CAUTION:

Protect the outer tube with a clean rag to avoid damaging.

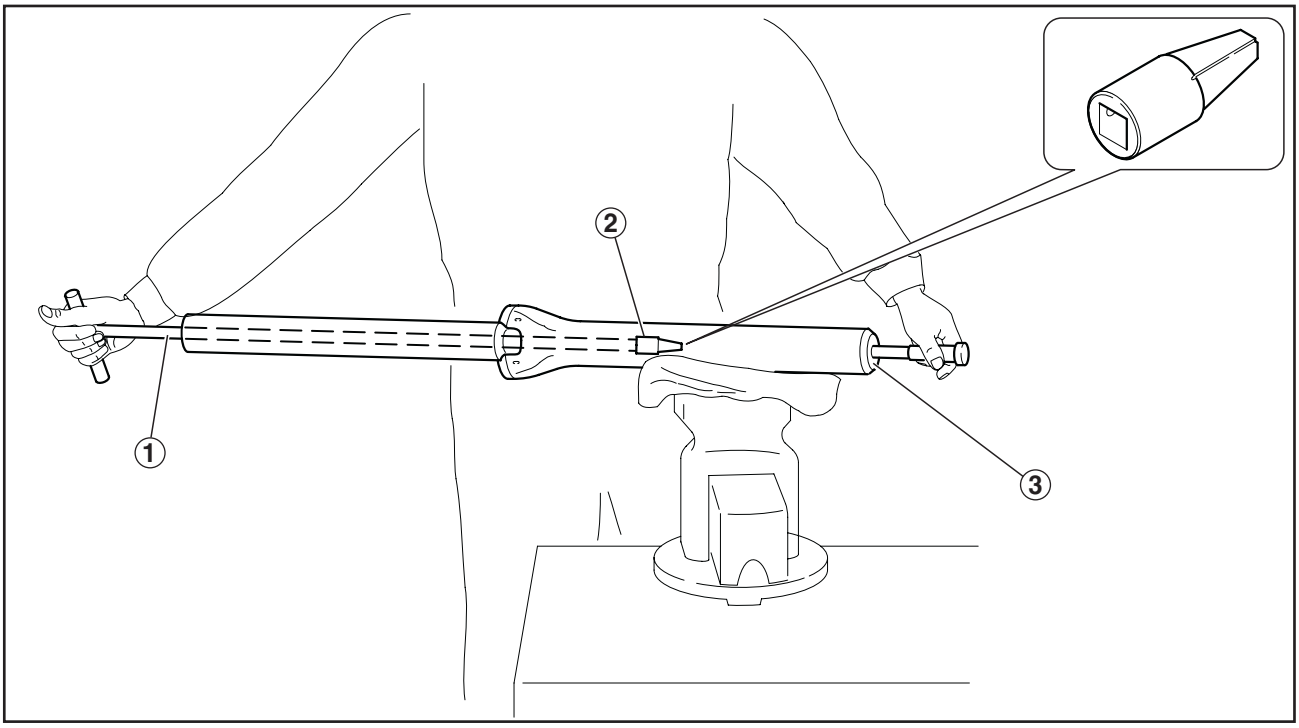

3. Insert an Allen key in the bolt (3) at the bottom of the outer tube and the special tool (1) with the holder (2) on the damper cylinder assembly and unscrew the bolt completely.

CAUTION:

Before unscrewing the bolt ensure that the end of the damper rod holder is correctly engaged on the damper cylinder assembly.

T-handle (1):
90890-01326
Front fork damper rod holder (2):
90890-01460

4. Remove:
   - Damper cylinder assembly (from inner tube)
5. Clean the inside of the outer tube and the outside of the damper cylinder assembly with petrol.

CAUTION:

Taking care not to let petrol enter the inside of the damper cylinder assembly as it would seriously compromise its functioning.

WARNING

Never tamper with the damper cylinder assembly! Tampering with the damper cylinder assembly by non authorized personnel can compromise tha safety of the fork. In order not to cause damage to the environment collect the used oil and take it to a collection centre.

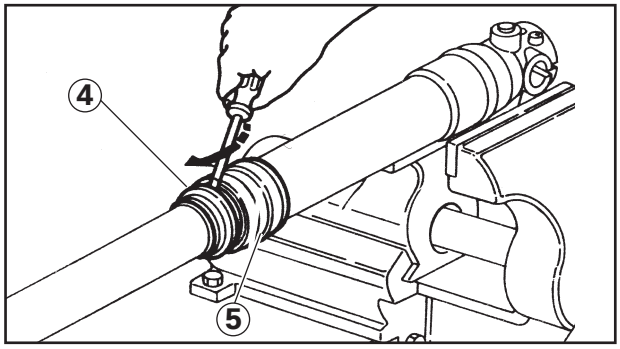

6. Tightly clamp the fork leg horizontally fastening it by caliper attachment on the outer tube.

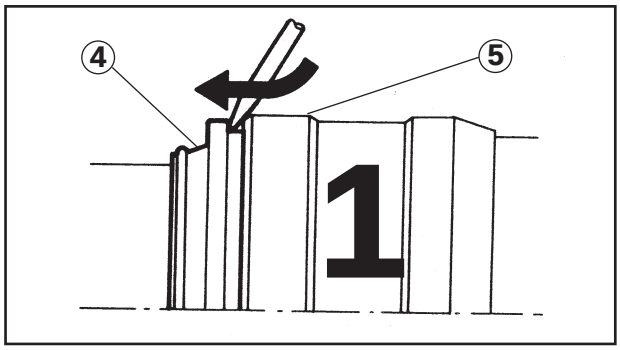

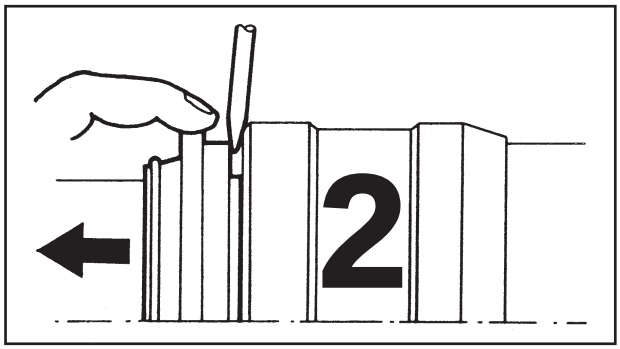

7. Using a screwdriver prise the dust seal (4) from the edge of the oil seal seat (5).
   Then withdraw the dust seal using force.

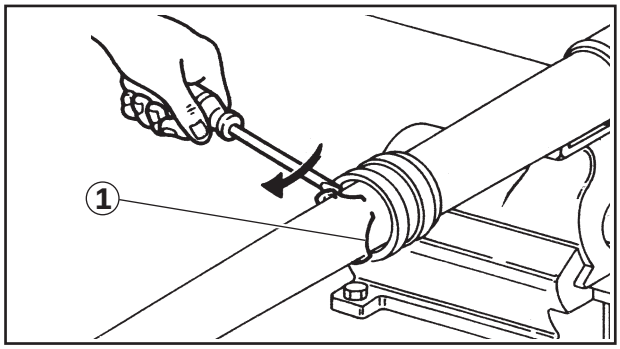

8. Remove:
   - Snap ring (1) (using a screwdriver)

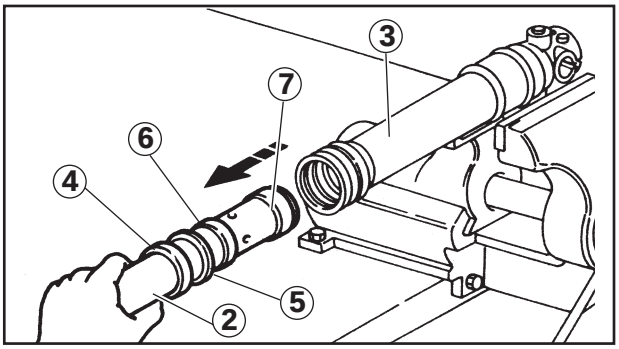

9. With a few sharp blows withdraw the inner tube (2) from the outer tube (3).

NOTE:

The oil seal (4), the washer (5), the outer tube DU bush (6) and the inner tube DU bush (7) are installed on the inner tube and must be removed and replaced with new one.

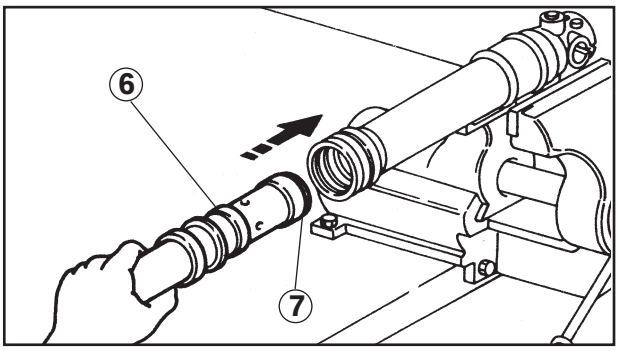

10. Install:
    - Outer tube DU bush (6) (new)
    - Inner tube DU bush (7) (new)

CAUTION:

Check that the inner tube bush (7) is inserted correctly in its seat on the end of the inner tube.

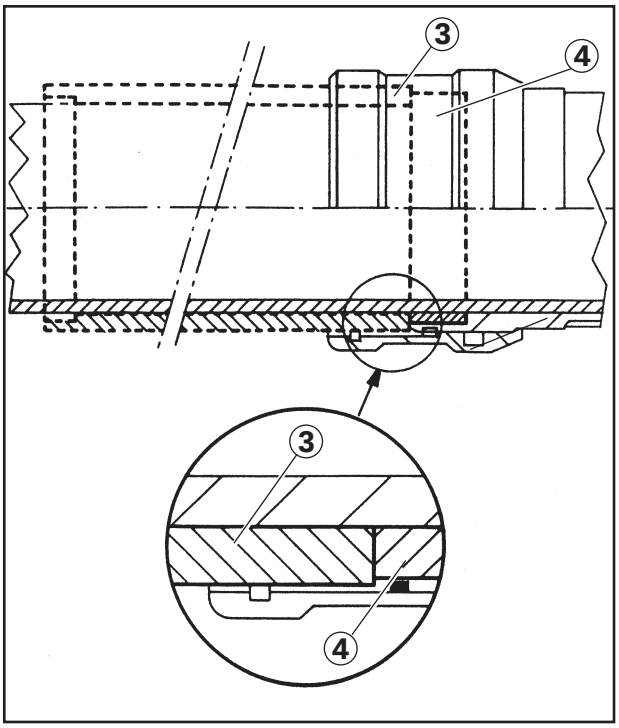

11. Mount the tool (1) on the inner tube (2) with the side (3) matching the DU outer tube bush (4) and clamp it keeping the two joints (5) at the top and bottom (never towards the jaws of the vice) and make it protrude by at least 40 mm at the sides.

	DU bush/oil seal driver (1): 90890-11043

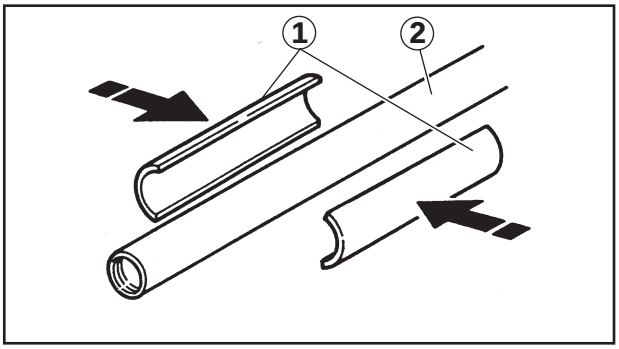

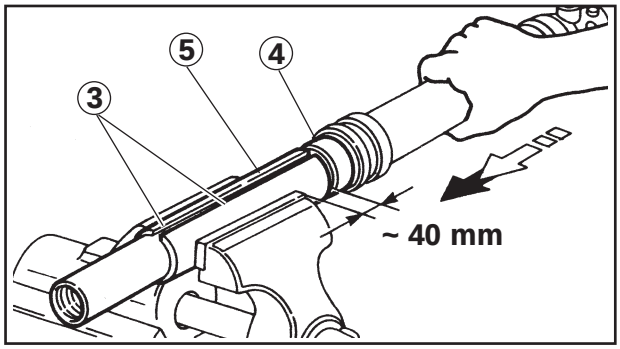

12. The vice tightened, grip the outer tube and with a few strong blows hit it against the tool (3) until the DU outer tube bush (4) is correctly positioned in its seat.

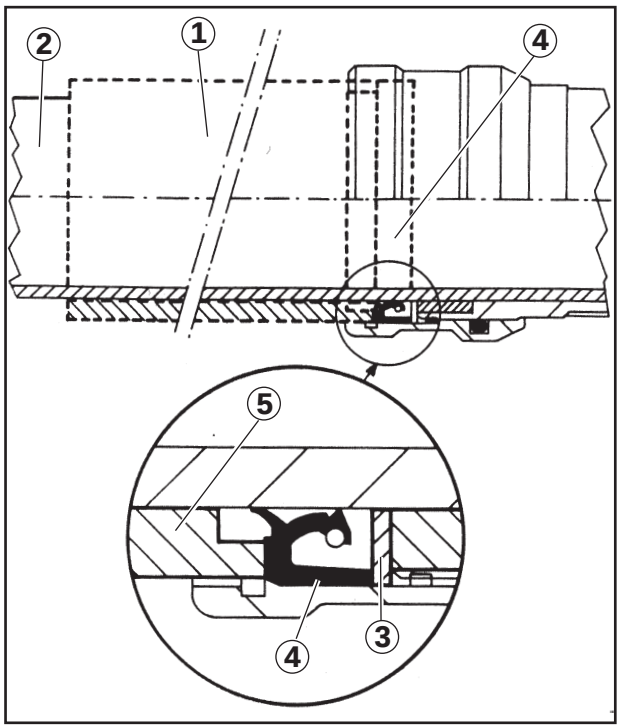

13. Remove the fork leg from the vice and remove the tool (1). Insert the new washer (3) and the new oil seal (4) as shown on the inner tube (2).

NOTE:
Apply lightweight lithium-soap base grease to the oil seal before installing it.

14. Mount the tool (1) on the inner tube (2) with the side (5) matching the oil seal (4) and clamp it keeping the two joints (6) at the top and bottom (never towards the jaws of the vice) and make it protrude by at least 40 mm at the sides.

	DU bush/oil seal driver (1): 90890-11043

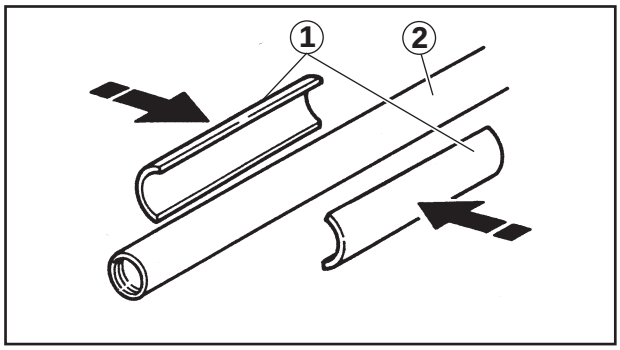

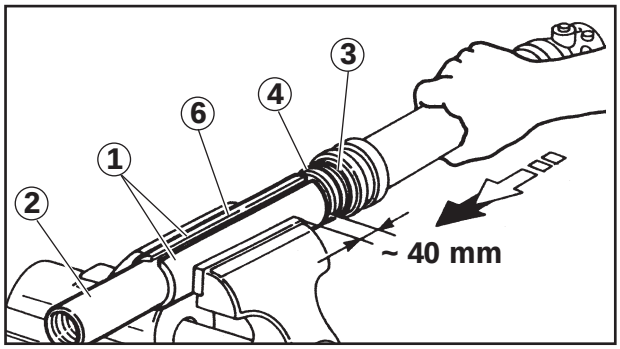

15. The vice tightened, grip the outer tube and with a few strong blows hit it against the tool (1). After each blow rotate the outer tube slightly in order to install the oil seal (4) correctly and until it is completely inserted in its seat.

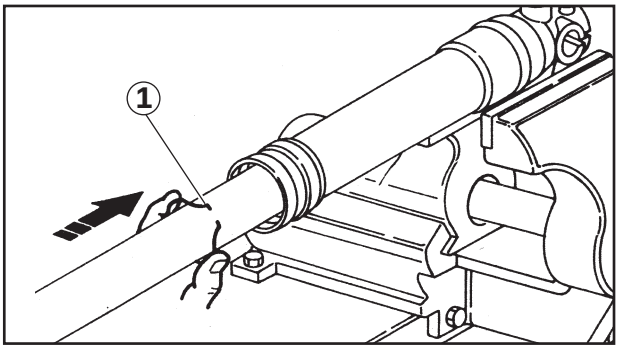

16. Tightly clamp the fork leg horizontally fastening it by caliper attachment on the outer tube.
17. Install:
    - Snap ring (1)

CAUTION:

Check that the snap ring is correctly seated.

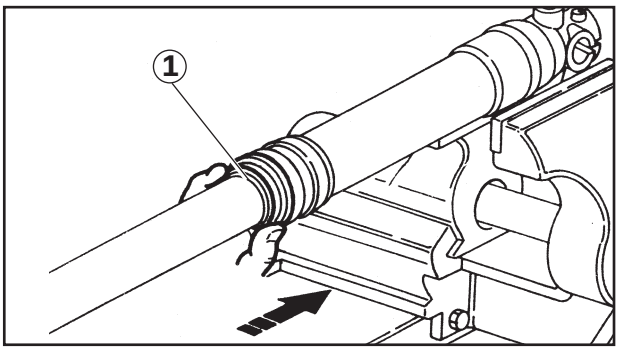

18. Install:
    - Dust seal (1) (new)

NOTE:

Apply lightweight lithium-soap base grease to the dust seal before installing it.

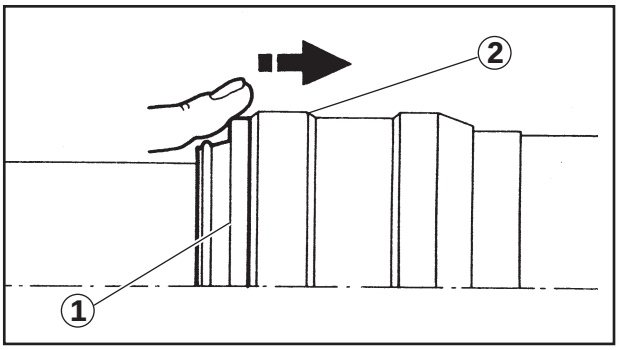

NOTE:

Taking care to insert completely the dust seal (1) with force in the outer tube (2).

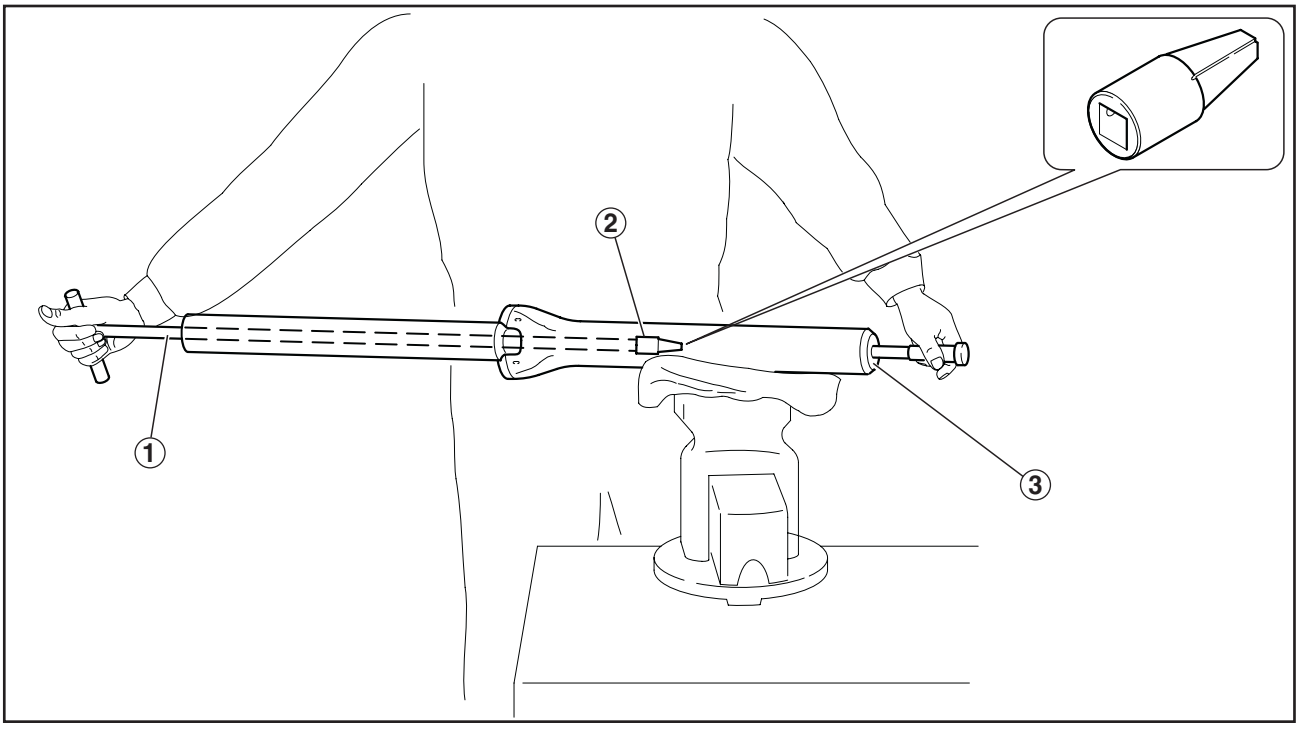

19. Insert:
    - Damper cylinder assembly (in the inner tube)

20. Insert an Allen key in the bolt (3) at the bottom of the outer tube and the special tool (1) with the holder (2) on the damper cylinder assembly and screw the bolt completely.

CAUTION:

During tightening the bolt ensure that the end of the damper rod holder is correctly engaged on the damper cylinder assembly.

T-handle (1):
90890-01326
Front fork damper rod holder (2):
90890-01460

Damper cylinder assembly bolt (3):
25 Nm (2.5 kgm)

21. Fill:
    - Fork leg oil
      Refer to “OIL REPLACEMENT”section.

OIL LEAKAGE FROM DUST SEAL

If there is a leakage of oil from between the dust seal (1) and the inner tube (2) replace the oil seal (refer to “SEAL AND BUSH REPLACEMENT” section).

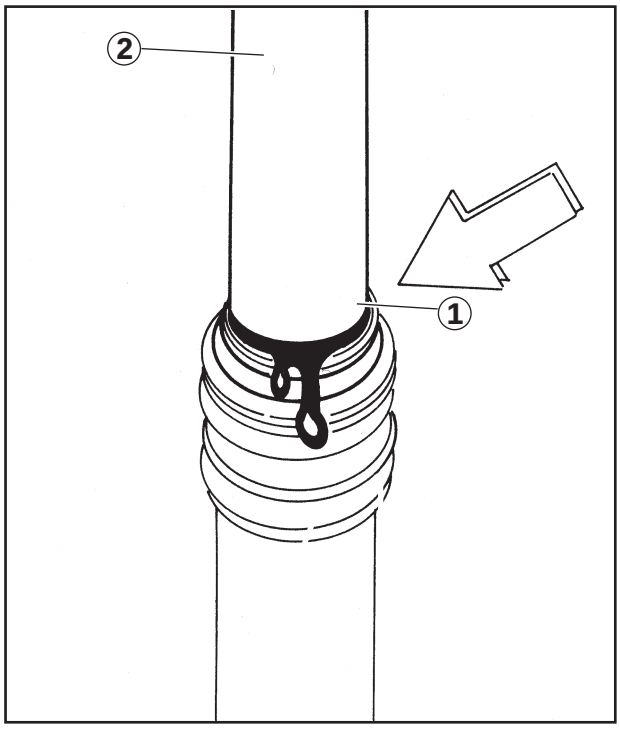

ANOMALOUS HYDRAULIC BRAKING

If the fork shows an anomalous hydraulic braking effect it is necessary to overhaul the damper cylinder assembly.

WARNING

Never tamper with the damper cylinder assembly! This operation should be done by authorized personnel. Tampering with the damper cylinder assembly by non authorized personnel can compromise the safety of the front fork. The building firm will not assume any responsibility for any damages resulting from such action.

FRONT FORK INSPECTION

CAUTION:

The front fork has a very sophisticated internal construction and is particularly sensitive to foreign bodies.
Use enough care to prevent foreign bodies entering when replacing oil or disassembling and reassembling the front fork.

1. Inspect:
   - Cap bolt (inner tube)
     Wear/Damage → Replace.
   - O-Rings
     Damage → Replace.

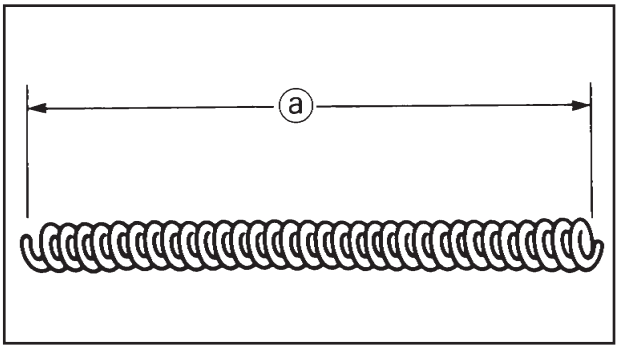

2. Measure:
   - Fork spring free length (a)
     Out of specification → Replace.

Fork spring free length:
530 mm

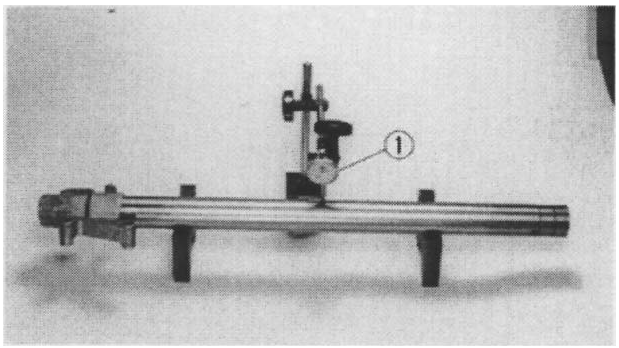

3. Inspect:
   - Inner tube surface
     Score marks → Repair or replace.
     Use #1.000 grit wet sandpaper.
     Damaged oil seal surface → Replace.
   - Inner tube bending
     Out of specification → Replace.
     Use a dial gauge (1).

Inner tube bending limit:
0.2 mm

NOTE:
The bending value is shown by one half of the dial gauge reading.

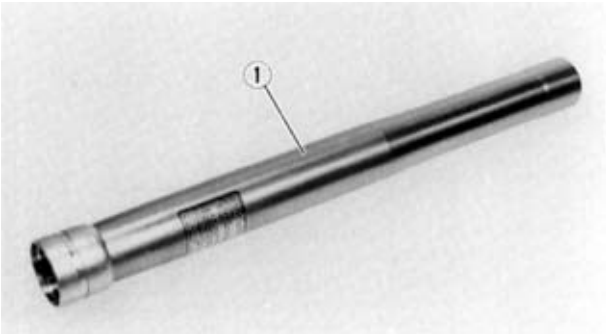

WARNING

Do not attempt to straighten a bent inner tube as this may have dangerous consequences.

4. Inspect:
   - Outer tube (1)
     Score marks/Wear/Damage → Replace.

5. Inspect:
   - Cap bolt
   - O-ring
     Wear/Damage → Replace.

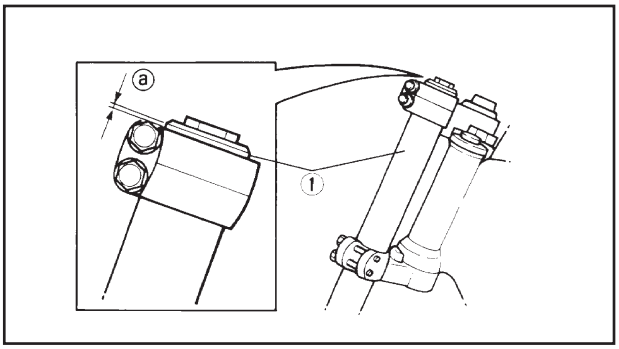

FRONT FORK INSTALLATION

1. Install:
   - Front fork (1)
     Temporarily tighten the pinch bolts (lower).
2. Tighten:
   - Cap bolt

Cap bolt:
20 Nm (2.0 kgm)

NOTE:
Do not tighten the pinch bolt (upper) yet.

3. Adjust:
   - Front fork top end (a)

Front fork top end (a)
(Standard):
0 mm

4. Tighten:
   - Pinch bolt (upper and lower bracket)

Pinch bolt (upper bracket):
28 Nm (2.8 mkg)
Pinch bolt (under bracket):
23 Nm (2.3 mkg)

NOTE:
Always tighten the lower pinch bolt (to the prescribed torque) and then the upper one (to the prescribed torque) and then retighten the lower one (to the prescribed torque).

5. Install:
   - Front wheel
   - Caliper
   - Brake hose
   - Tachometer cable
     Refer to “FRONT WHEEL” and “FRONT BRAKE” sections in this CHAPTER.

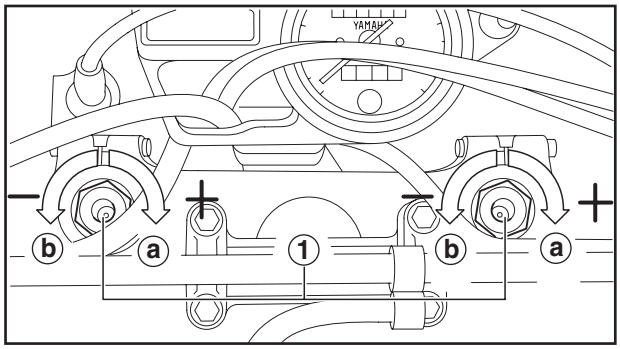

ADJUSTING THE FRONT FORK

This front fork is equipped with spring pre-load adjusting bolts.

WARNING

Always adjust both fork legs equally, otherwise poor handling and loss of stability may result.

Adjust the spring preload as follows.
To increase the spring preload and thereby harden the suspension, turn the adjusting bolt on each fork leg in direction ⓐ. To decrease the spring preload and thereby soften the suspension, turn the adjusting bolt on each fork leg in direction ⓑ.

	Setting
Minimum (soft)	1-2-3
Standard	4
Maximum (hard)	5-6-7-8-9-10

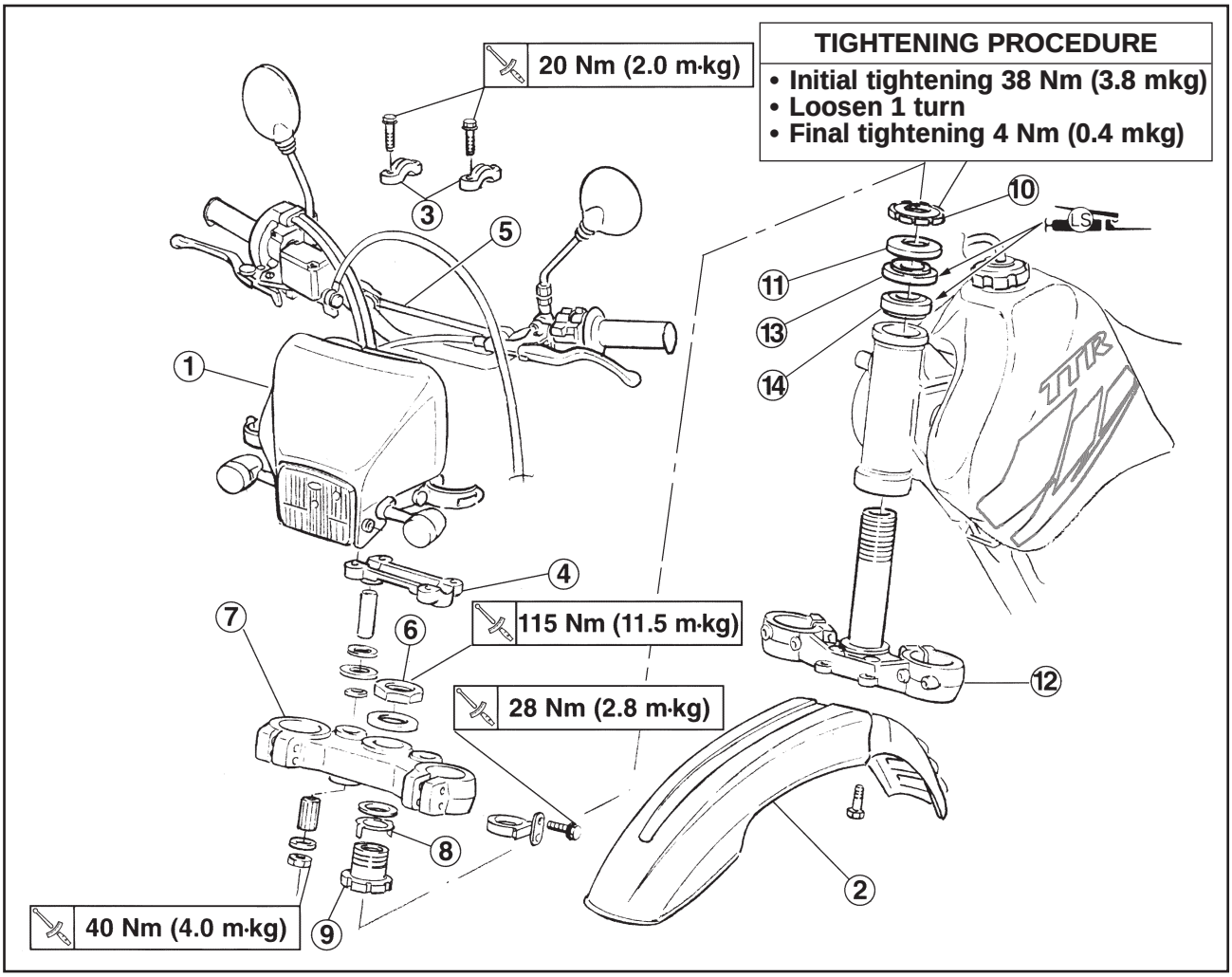

Order	Job name/Part name	Q.ty	Remarks
	Steering removal		Remove the parts in order. Park the motorcycle on a level surface. **⚠ WARNING** **Securely support the motorcycle to prevent it falling over.**
	Front wheel		Refer to “FRONT WHEEL REMOVAL” section.
	Fork legs		Refer to “FRONT FORK” section.
1	Cowling/Meter unit	1	Displace.
2	Front fender	1	
3	Handle upper holder	2	
4	Handle lower holder	1	
5	Handlebar	1	Displace.
6	Nut	1	
7	Upper bracket	1	
8	Special washer	1	

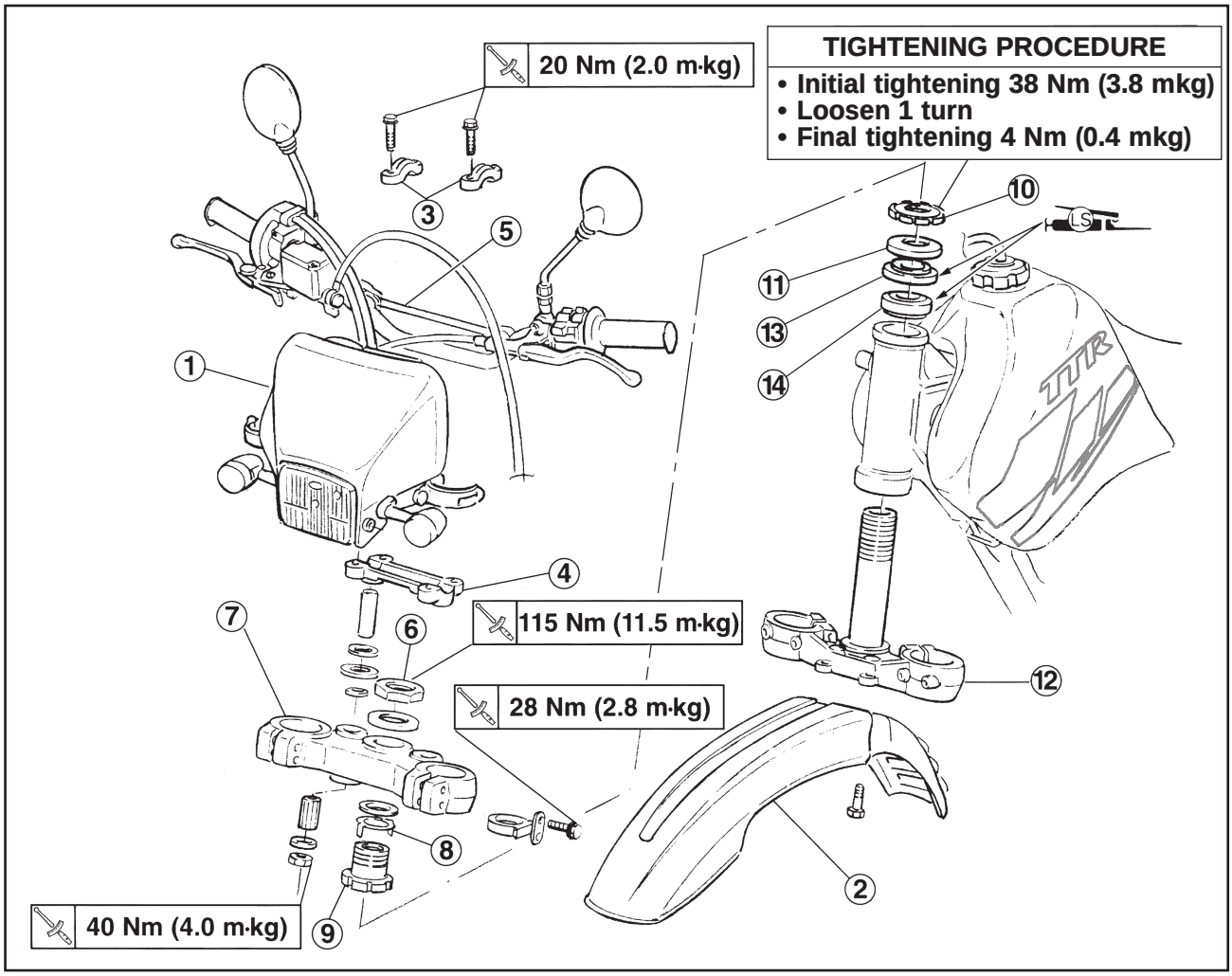

Order	Job name/Part name	Q.ty	Remarks
9	Upper ring nut	1	Refer to “STEERING REMOVAL/INSTALLATION” section.
10	Lower ring nut	1	
11	Ball race cover	1	
12	Lower bracket/Steering axle	1	
13	Bearing (upper)	1	
14	Bearing (lower)	1	
			Reverse the removal procedure for installation.

(1) Handle upper holder
(2) Handle lower holder
(3) Spacer
(4) Nut
(5) Plate washer
(6) Upper bracket
(7) Brake hose holder
(8) Plate washer
(9) Special washer
(10) Upper ring nut
(11) Lower ring nut
(12) Ball race cover
(13) Bearings
(14) Steering lock
(15) Steering axle
(16) Wire guide

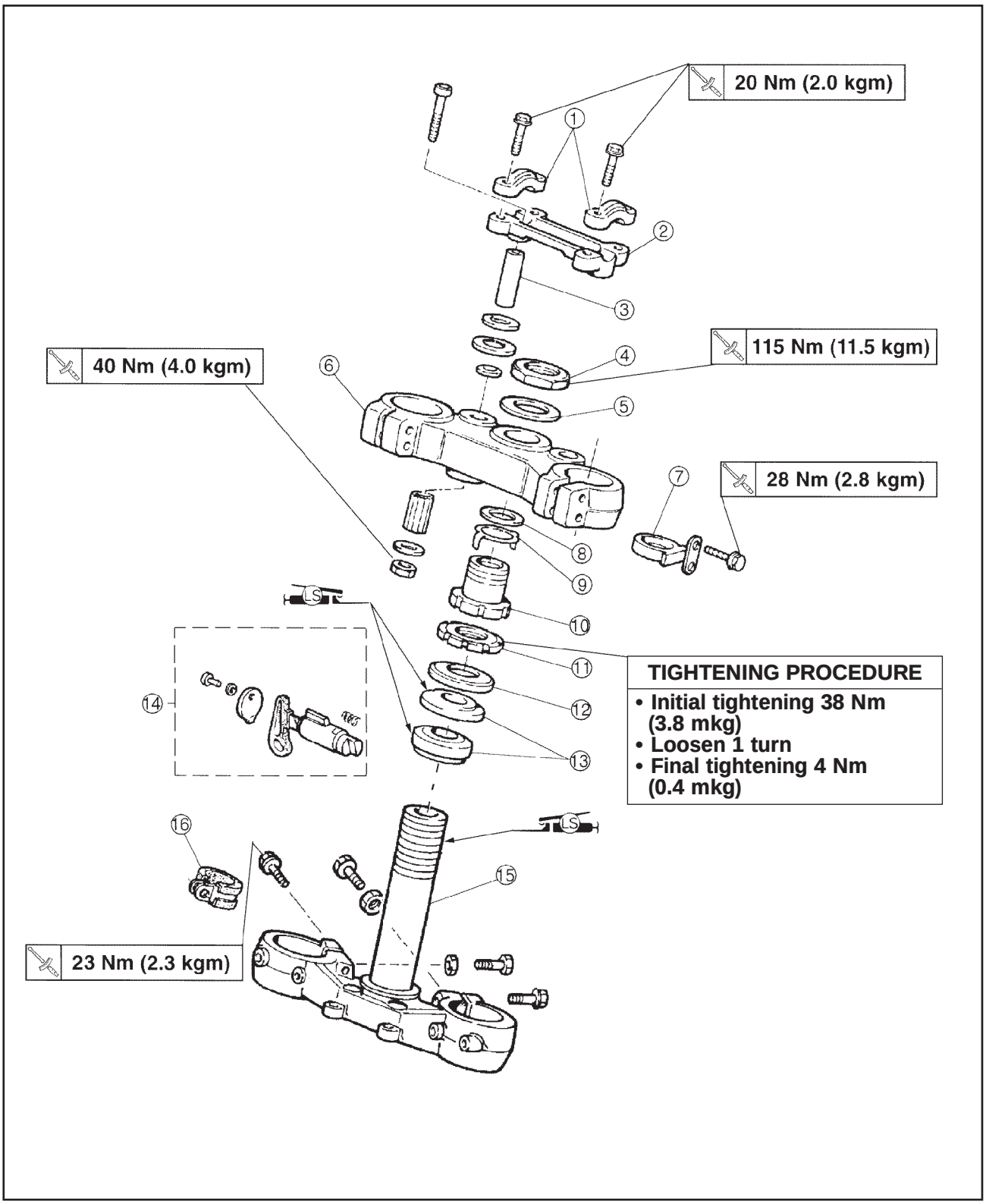

STEERING REMOVAL

1. Park the motorcycle on a level surface.

WARNING

Support the motorcycle securely to prevent it falling over.

2. Raise the front wheel placing a suitable support under the engine.
3. Remove:
   - Front wheel
     Refer to “FRONT WHEEL-REMOVAL” section.
   - Front fork
     Refer to “FRONT FORK-REMOVAL” section.
4. Remove:
   - Front fender
   - Cowling
   - Handlebar
   - Meter assembly

5. Remove:
   - Steering axle nut (1)
     Use the ring nut wrench (3).

	Ring nut wrench (3): 90890-01348

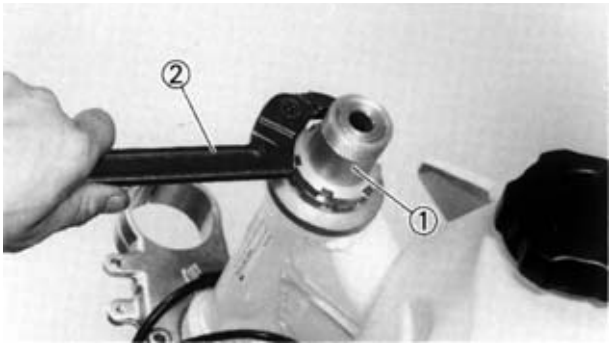

6. Remove:
   - Ring nut (upper) (1)
   - Use the ring nut wrench (2)

	Ring nut wrench (2): 90890-01268

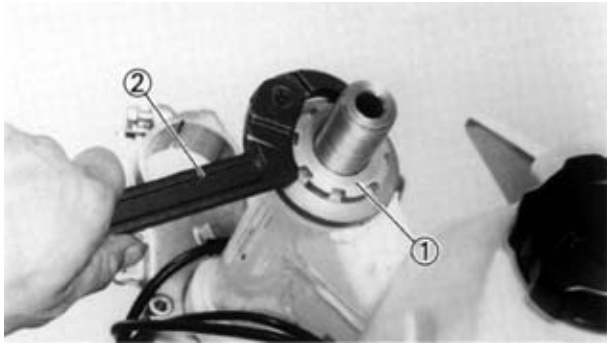

7. Remove:
   - Ring nut (lower) (1)
   - Use the ring nut wrench (2)

	Ring nut wrench (2): **90890-01268**

WARNING

Support the steering axle to prevent it falling.

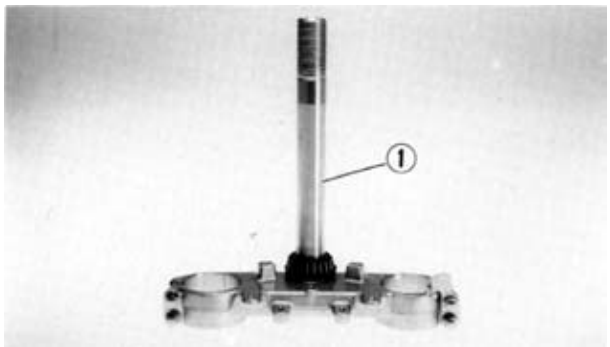

STEERING INSPECTION

1. Wash the bearings in solvent.
2. Inspect:
   - Bearing (upper and lower) (1)
     Corrosion/Damage → Replace races and bearing.
     Install the bearings in the races. Spin the bearing by hand.
     If the bearing rises or fails to run freely in the race, replace bearing and race.
3. Inspect:
   - Steering axle (1)
     Bend/Damage → Replace.

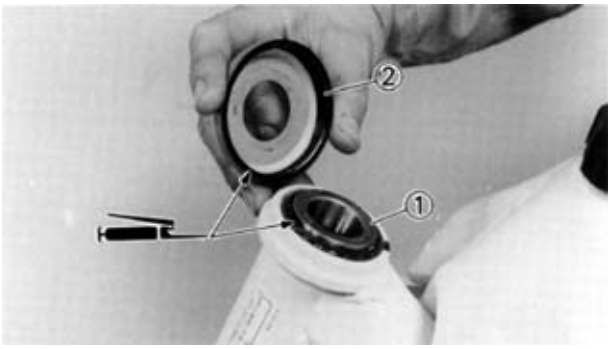

STEERING INSTALLATION

1. Install:
   - Bearing (1)
   - Ball race cover (2)

NOTE:
Apply lithium soap-base grease to the bearing and ball race cover lip.

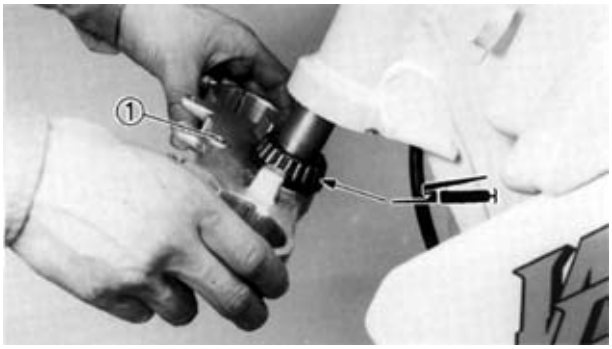

2. Install:
   - Lower bracket (1)

NOTE:
Apply lithium soap-base grease to the bearing.

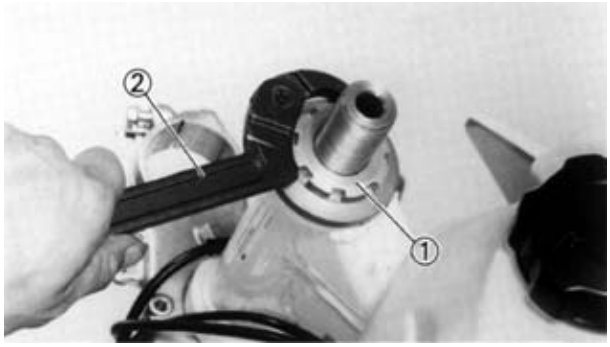

3. Install:
   - Ring nut (lower) (1)
     Use the ring nut wrench (2).

	Ring nut wrench: **90890-01268**

NOTE:
Apply the lithium soap-base grease to the steering axle thread.

▼▼▼▼▼▼▼▼▼▼▼▼▼▼▼▼▼▼▼▼▼▼▼▼▼▼▼▼▼▼▼▼▼▼

Lower ring nut tightening steps:

- Tighten the ring nut (1) using the ring nut wrench.

	Ring nut (lower) **(initial tightening):** **38 Nm (3.8 mkg)**

- Loosen the ring nut completely and retighten it to specification.

⚠ WARNING

Do not tighten excessively.

	Ring nut (lower) **(final tightening):** **4 Nm (0.4 mkg)**

▲▲▲▲▲▲▲▲▲▲▲▲▲▲▲▲▲▲▲▲▲▲▲▲▲▲▲▲▲▲▲▲▲▲

4. Check the steering axle by turning it lock to lock. If there is any binding, remove the steering axle assembly and inspect the steering bearings.

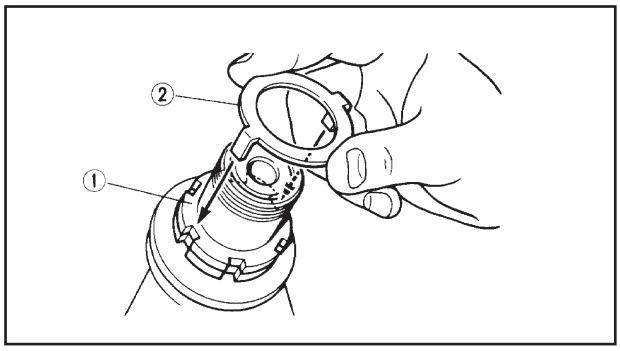

5. Install:
   - Ring nut (upper) (1)
   - Special washer (2)

▼▼▼▼▼▼▼▼▼▼▼▼▼▼▼▼▼▼▼▼▼▼▼▼▼▼▼▼▼▼▼▼

Installation steps:

- Install the ring nut (upper) (1).
- Finger tighten the ring nut (upper), then align the slots of both ring nuts. If not aligned, hold the lower ring nut and tighten the other until they are aligned.
- Install the special washer.

NOTE:

Make sure the special washer tabs are in the slots.

▲▲▲▲▲▲▲▲▲▲▲▲▲▲▲▲▲▲▲▲▲▲▲▲▲▲▲▲▲▲▲▲

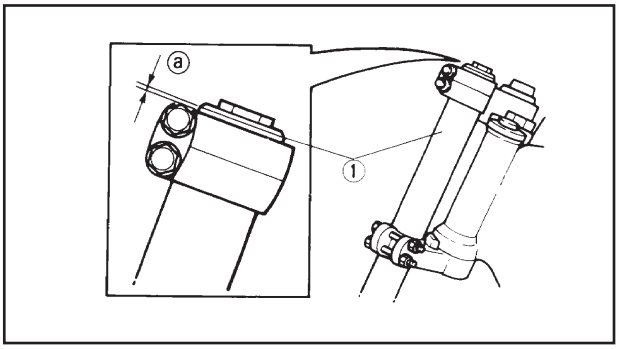

6. Install:
   - Upper bracket
   - Fork legs (left and right) (1)

NOTE:

Temporarily install the under bracket pinch bolt to achieve the correct fork position.

Front fork top end (a) (standard):
0 mm

7. Install:
   - Plate washer (1)
   - Steering axle nut (2)
     Use the lock nut wrench (4).

Lock nut wrench (4):
90890-01348

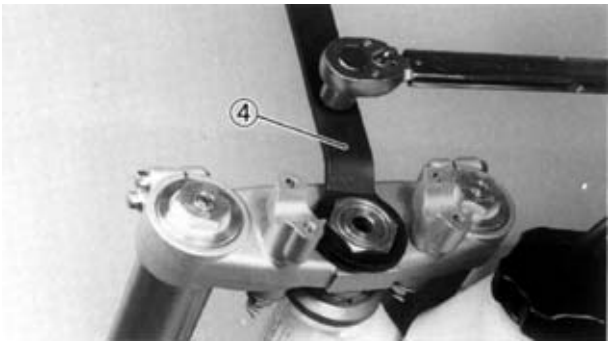

NOTE:

Set the torque wrench to the lock nut wrench so that they form a right angle.

Steering axle nut:
115 Nm (11.5 mkg)

8. After tightening the nut, check the steering for smooth movement. If it is not smooth, adjust by progressively loosening the (lower) ring nut.
9. Tighten:
   - Pinch bolts (upper and lower bracket)

Pinch bolt (upper bracket):
28 Nm (2.8 mkg)
Pinch bolt (under bracket):
23 Nm (2.3 mkg)

NOTE:

Always tighten the lower pinch bolt (to the prescribed torque) and then the upper one (to the prescribed torque) and then retighten the lower one (to the prescribed torque).

CAUTION:

Tighten the pinch bolt to specified torque. If torqued too much, it may cause malfunctioning of the front fork.

10. Install:
    - Handlebar holder
    - Handlebar
    - Handlebar upper holder

Fitting nut (handle lower holder):
40 Nm (4.0 mkg)
Flange bolt (handlebar holder):
20 Nm (2.0 mkg)

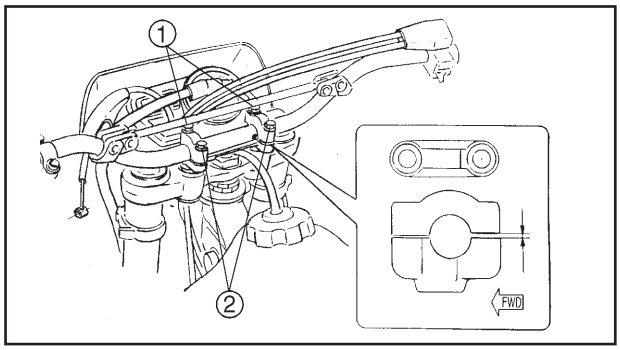

CAUTION:

First tighten the front bolt on the handlebar holder, then tighten the rear bolt.

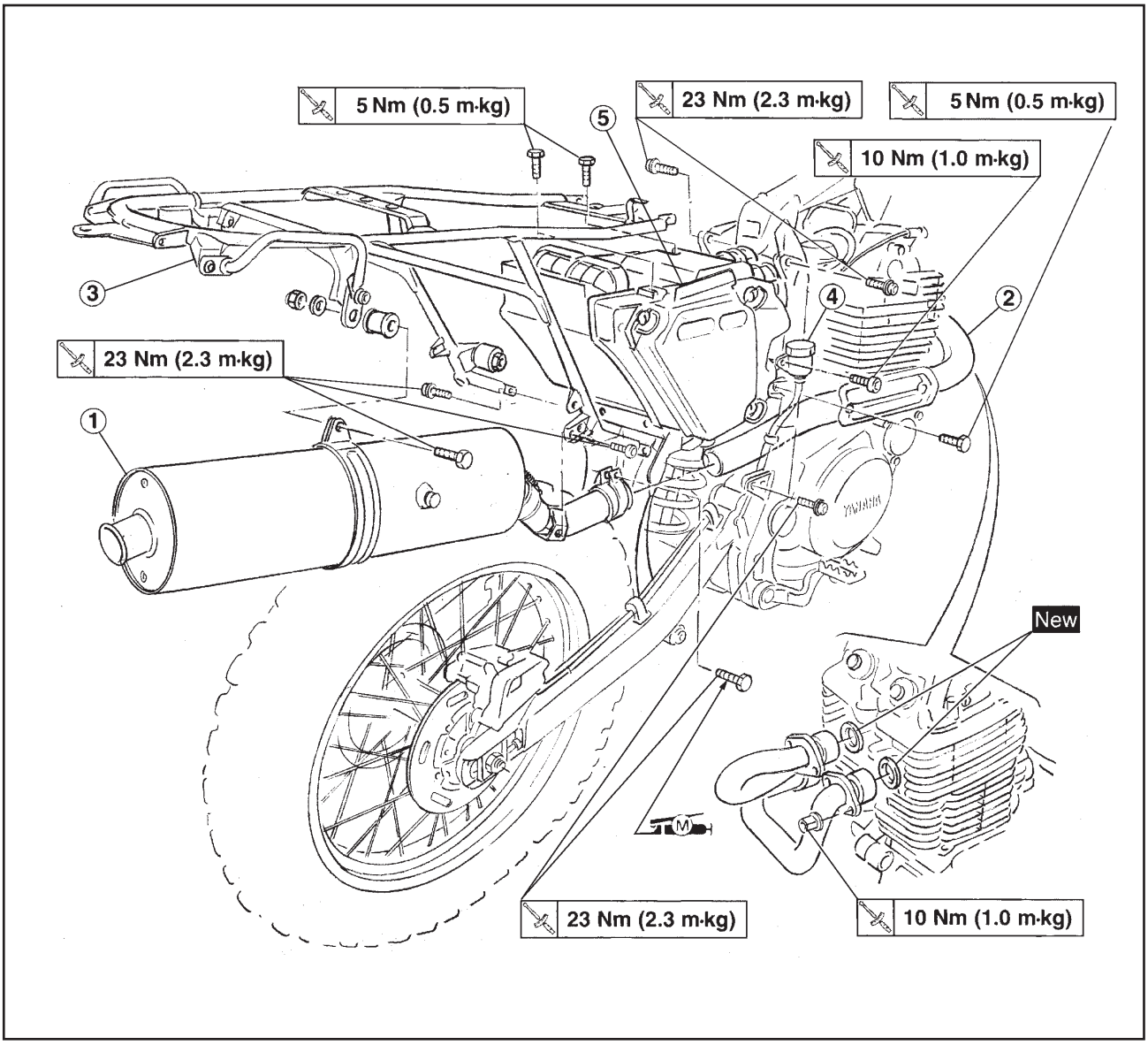

Order	Job name/Part name	Q.ty	Remarks
	Shock absorber removal		Remove the parts in order.
			WARNING **Securely support the motorcycle so there is no danger of it falling over.**
	Seat Fuel tank Rear cowling		Refer to “SEAT, FUEL TANK AND REAR COWLING” section in Chapter 3.
	Battery leads	2	Disconnect. **NOTE:** First, disconnect the negative lead, then the positive lead.
1	Muffler	1	Refer to “REAR SHOCK ABSORBER REMOVAL” section. Secure the brake fluid tank to the frame in an upright position to avoid air entering the hydraulic system.
2	Exhaust pipe assembly	1	
3	Rear frame	1	
4	Brake fluid reserve tank	1	
5	Air filter case	1	

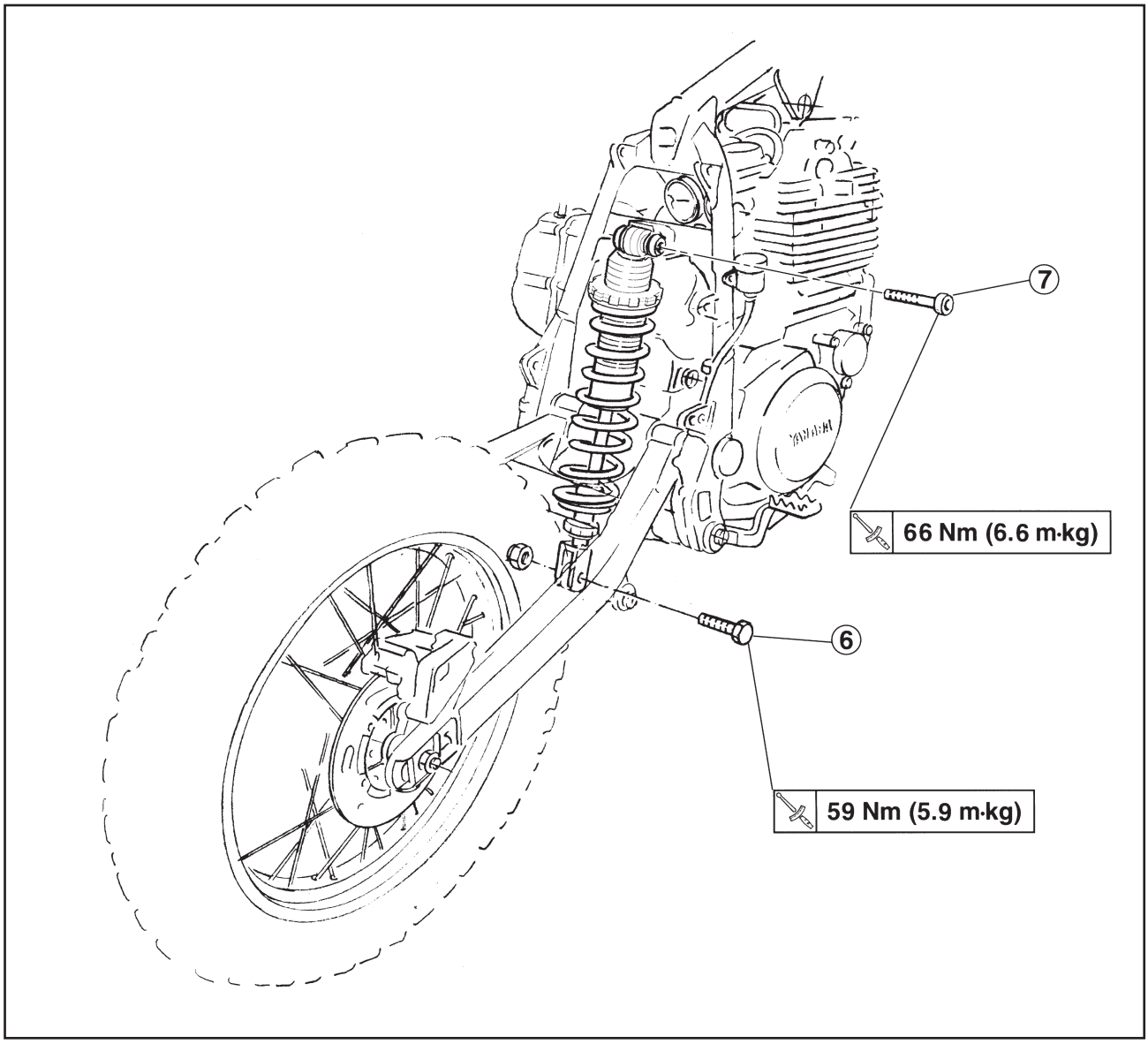

Order	Job name/Part name	Q.ty	Remarks
6	Lower bolt	1	
7	Upper bolt	1	
			Reverse the removal procedure for installation.

(1) Rear shock absorber
(2) Spring
(3) Spring adjuster ring nut
(4) Lock ring nut
(5) End of stroke buffer
(6) Special spanner

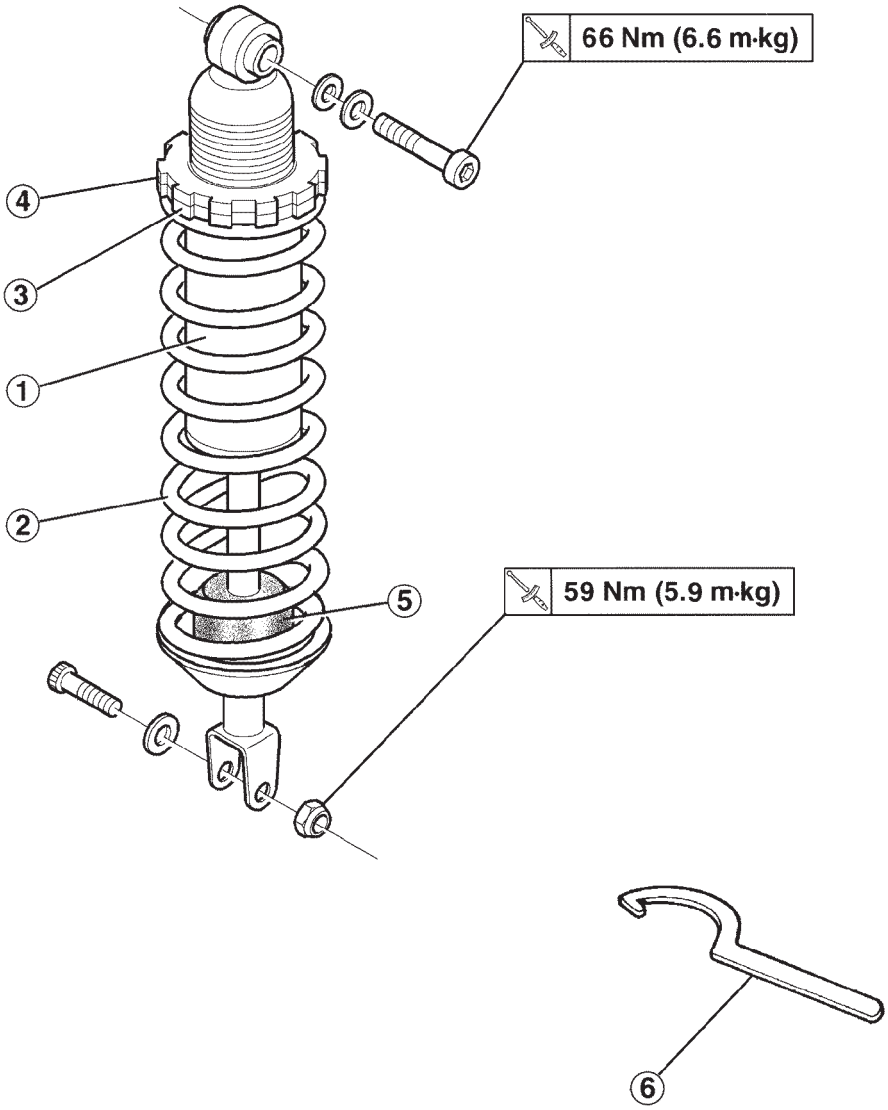

WARNING

This shock absorber contains high-pressure nitrogen gas. Read the following information carefully before handling it. The manufacturer cannot be held responsible for any damage or injury that may result from improper handling.

- **Never tamper with or attempt to open the cylinder or the tank.**
- **Never expose the shock absorber to a naked flame or other source of heat. This might cause the pressurised gas to explode.**
- **Do not deform or damage the cylinder in any way. Damage to the cylinder would impair the damping effect.**
- **Be careful not to scratch the surface of the rod: this would cause the oil to leak.**
- **Before disposing of the shock absorber, read the section "NOTES ON DISPOSAL".**

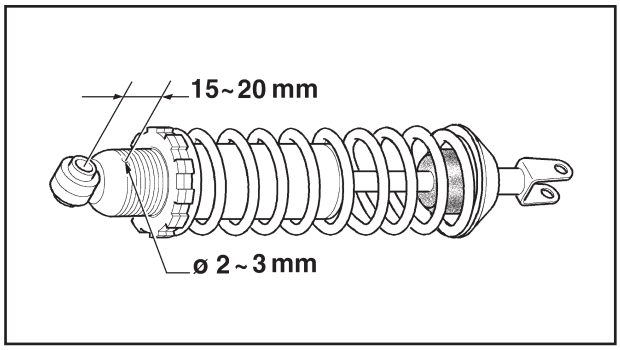

NOTE ON DISPOSAL

▼▼▼▼▼▼▼▼▼▼▼▼▼▼▼▼▼▼▼▼▼▼▼▼▼▼▼▼▼▼▼▼

Before neutralising the rear shock absorber:

The gas pressure must be discharged before disposing of the shock absorber it is necessary to discharge the gas pressure. To do this, bore a hole of 2~3 mm through the cylinder wall about 15~20 mm from the bottom of the gas chamber.

WARNING

Wear protective goggles to avoid eye injuries from escaping gas and/or metal chips.

▲▲▲▲▲▲▲▲▲▲▲▲▲▲▲▲▲▲▲▲▲▲▲▲▲▲▲▲▲▲▲▲

SHOCK ABSORBER REMOVAL

WARNING

Support the motorcycle securely to prevent it from falling over.

1. Park the motorcycle on a level surface.
2. Remove:
   - Seat
   - Rear cowling
   - Fuel tank
     See section “SEAT, FUEL TANK AND REAR COWLING” in CHAPTER 3.
3. Disconnect:
   - Battery leads

NOTE:
First, disconnect the negative lead, then the positive lead.

4. Remove:
   - Exhaust pipe assembly
   - Rear frame
   - Air filter case
5. Raise the rear wheel placing a suitable support under the engine.
6. Remove:
   - Rear wheel
     Refer to “REAR WHEEL REMOVAL” section.

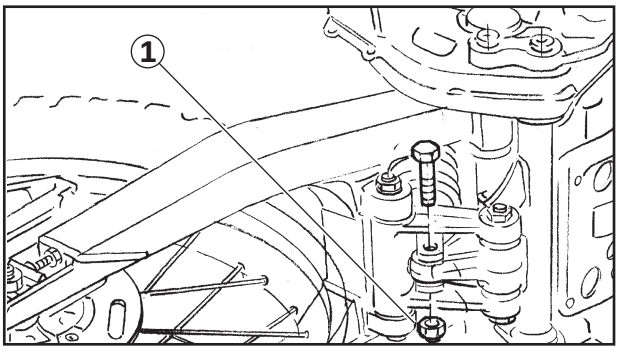

7. Remove:
   - Shock absorber fastening nut (1)
   - Lower mounting bolt

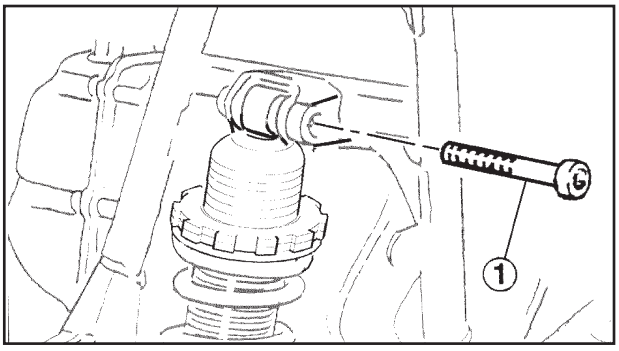

8. Remove:
   - Upper mounting bolt (1)
   - Rear shock absorber

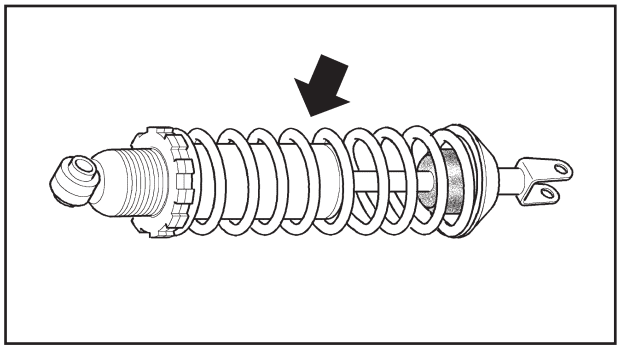

SHOCK ABSORBER INSPECTION

1. Inspect:
   - Shock absorber
     Oil leak/Damaged → Replace.

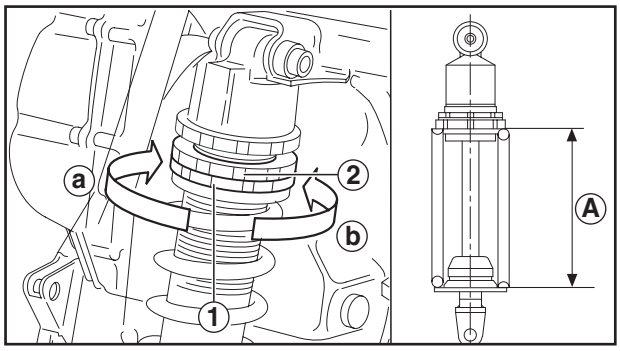

REAR SHOCK ABSORBER ADJUSTMENT

This shock absorber is equipped with a spring preload adjuster.

CAUTION:

Never attempt to turn an adjusting mechanism beyond the maximum or minimum settings.

Adjust the spring preload as follows.

1. Loosen the locknut.
2. To increase the spring preload and thereby harden the suspension, turn the adjusting nut in direction ⓐ. To decrease the spring preload and thereby soften the suspension, turn the adjusting nut in direction ⓑ.

NOTE:

- Use the special wrench included in the owner's tool kit to make the adjustment.
- The spring preload setting is determined by measuring distance A, shown in the illustration. The longer distance A is, the lower the spring preload; the shorter distance A is, the higher the spring preload. With each complete turn of the adjusting nut, distance A changes by 1.5 mm.

Spring preload:
Minimum (soft):
Distance A = 217 mm
Standard:
Distance A = 211 mm
Maximum (hard):
Distance A = 205 mm

2. Tighten the locknut to the specified torque.

	Locknut: **45 Nm (4.5 m·kgf)**

CAUTION:

Always tighten the locknut against the adjusting nut, and then tighten the locknut to the specified torque.

SWINGARM

(1) Upper chain case
(2) Swingarm
(3) Chain support
(4) Swingarm guard seal
(5) Connecting rod
(6) Relay arm

[A] LATERAL FREE PLAY (END): 1.0 mm
[B] LATERAL FREE PLAY: 0.4 ~ 0.7 mm

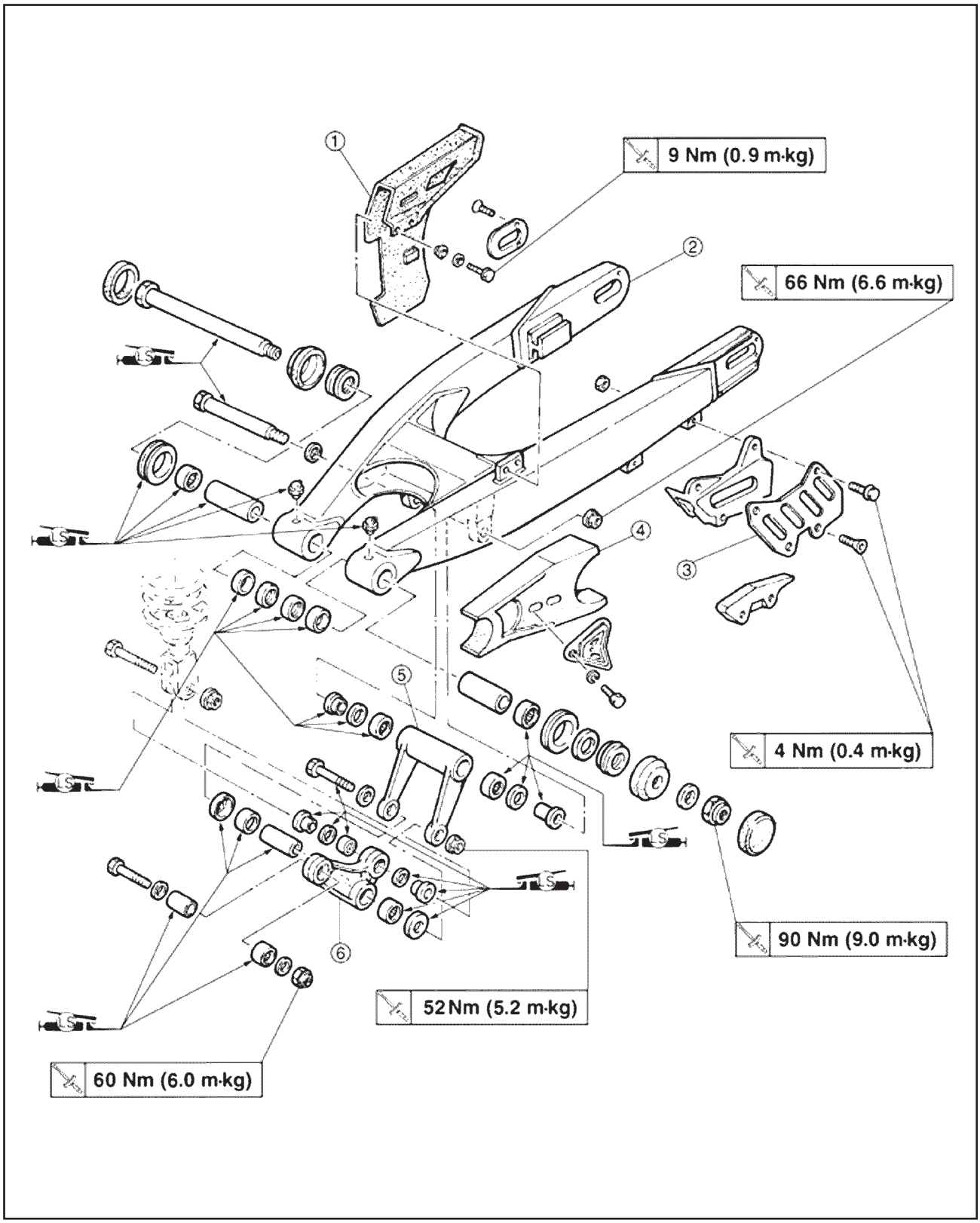

SWINGARM REMOVAL

NOTE

Check free play and remove swingarm, if necessary, after removing the rear shock absorber.

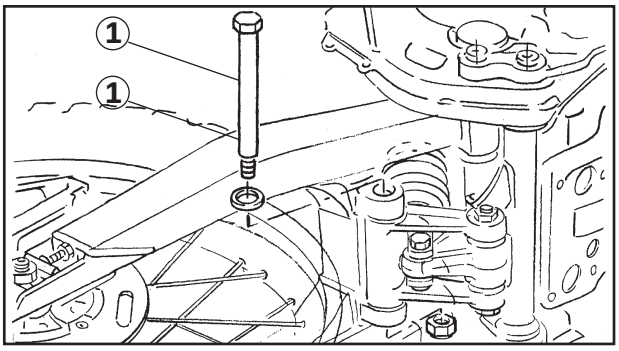

1. Remove:
   - Swingarm connecting rod bolt (1)

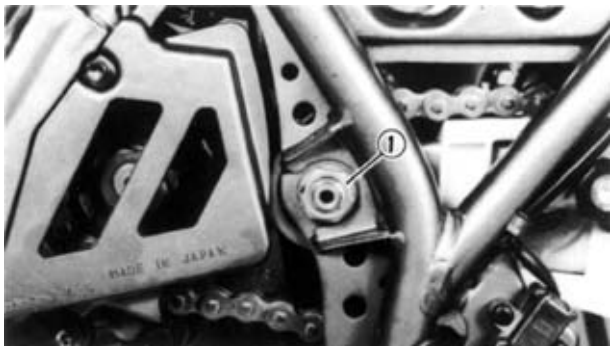

2. Check:
   - Swingarm free play

▼▼▼▼▼▼▼▼▼▼▼▼▼▼▼▼▼▼▼▼▼▼▼▼▼▼▼▼▼▼▼▼

Inspection procedure:

- Check the tightening torque of the nut which fastens the swingarm pivot shaft (1).

	Nut (pivot shaft): **90 Nm (9.0 mkg)**

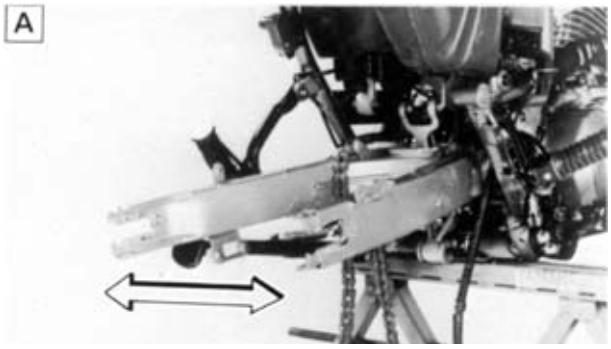

- Check the lateral free play [A] of the swingarm moving it laterally.
  If the free play seems excessive, verify the collar, bearings, washer and thrust cover.

	Lateral free play **(at end of swing arm):** **Limit: 1.0 mm**

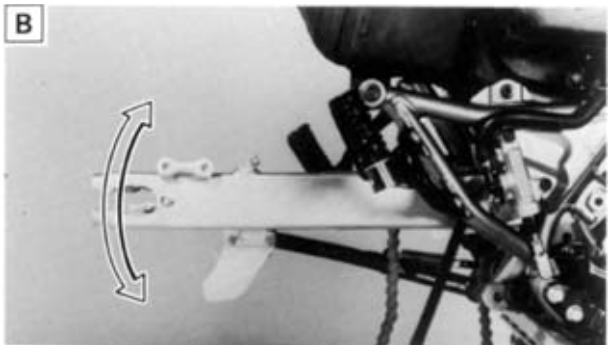

- Check the vertical movement [B] of the swingarm, moving it up and down.
  If the movement seems rigid, unsmooth or jerky, inspect the internal collar, the bearings, the washer and the thrust cover.

▲▲▲▲▲▲▲▲▲▲▲▲▲▲▲▲▲▲▲▲▲▲▲▲▲▲▲▲▲▲▲▲

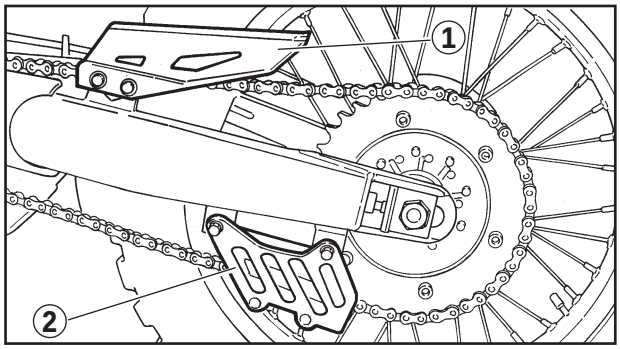

3. Remove:
   - Upper chain case (1)
   - Chain support (2)

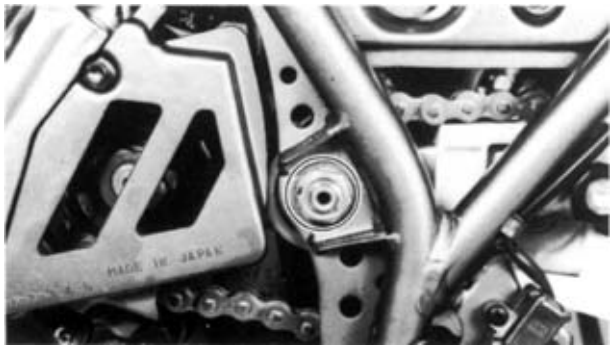

4. Remove:
   - Swingarm pivot shaft
   - Swingarm

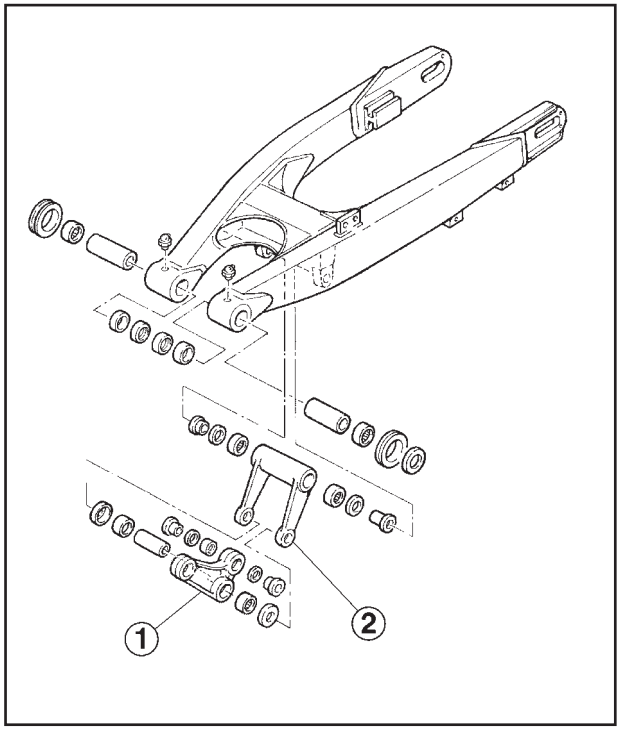

SWINGARM INSPECTION

1. Inspect:
   - Swingarm
     Deformation/Cracks/Damage → Replace.
2. Inspect:
   - Connecting rod (1)
   - Relay arm (2)
     Deformation/Cracks/Damage → Replace.
3. Inspect:
   - Oil seals
     Wear/Damaged → Replace.
   - Washers
   - Thrust cover
     Wear/Damaged → Replace.
   - Bushes
     Scratches/Damaged → Replace.
   - Bearings
     Pitting/Damaged → Replace.
4. Inspect:
   - Chain guard seal
   - Chain case and support
     Wear/Damage → Replace.

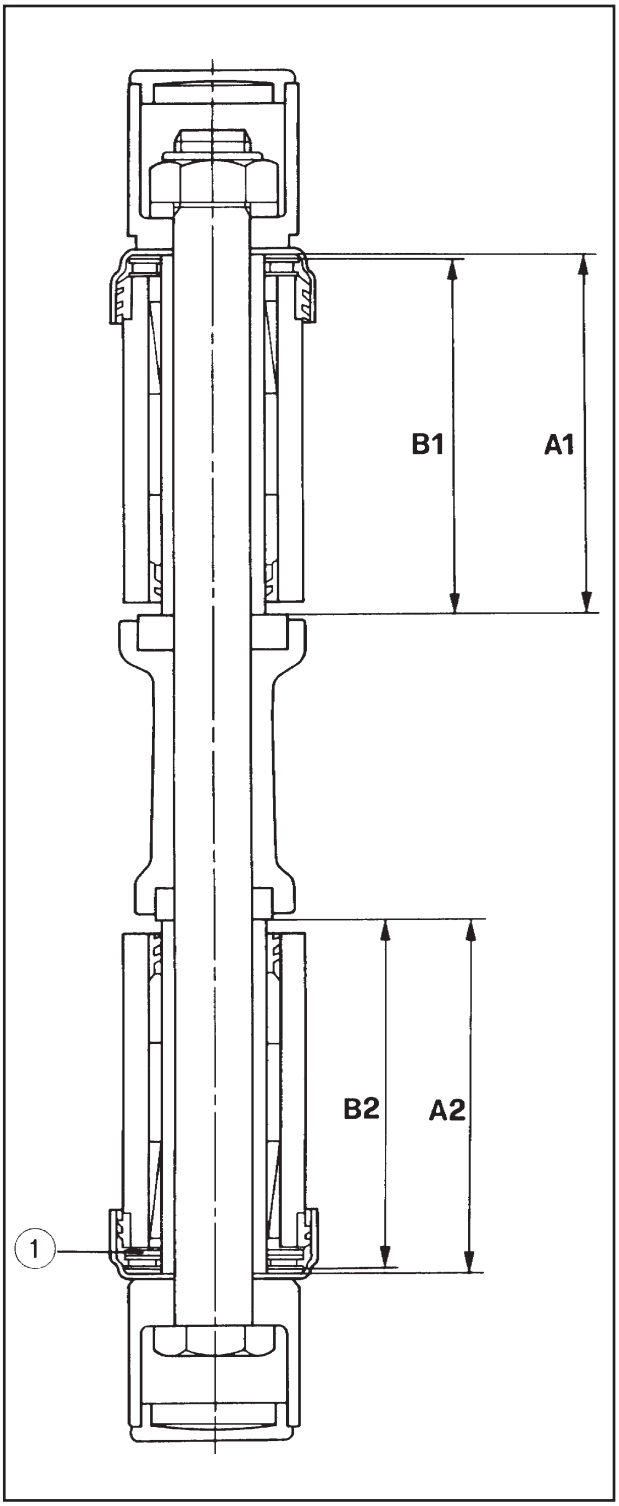

LATERAL FREE PLAY ADJUSTMENT

1. Measure:
   - Length of bushes A1 and A2
     Out of specification → Replace.

Length of bushes:
A1 = 76.70 ~ 76.85 mm
A2 = 74.90 ~ 75.00 mm

2. Measure:
   - Length B1 and B2
3. Calculate:
   - Lateral swing arm side play C.
     Out of specification → Adjust free play with special shims.
     Use the following formula:

C = (A1+A2) – (B1+B2)

Swing arm lateral free play C:
0.4 ~ 0.7 mm

4. Adjust:
   - Lateral side play using one or more adjust shims (1)

Measurement of adjust shim (1):
0.3 mm

NOTE:
When only one shim is used, install it on the left side; when two shims are used, install one on each side.

SWINGARM INSTALLATION

Perform “removal” operations in reverse order. Note the following points.

1. Lubricate:
   - Bearings
   - Bushes
   - Thrust cover (inside)
   - Flange
   - Swingarm pivot shaft
   - Bolt (connecting rod)
   - Bolt (relay arm)
   - Bolt (shock absorber)

Lithium-base grease

2. Tighten:

Nut (relay arm-swingarm):
66 Nm (6.6 mkg)
Nut (relay arm - connecting rod):
52 Nm (5.2 mkg)
Bolt (chain case):
9 Nm (0.9 mkg)

Nut (swingarm pivot shaft):
90 Nm (9.0 mkg)

Bolt (chain support):
4 Nm (0.4 mkg)

Nut (relay arm-frame):
60 Nm (6.0 mkg)

Bolt (rear shock absorber):
59 Nm (5.9 mkg)

Screw (chain case):
4 Nm (0.4 mkg)

3. Install:
   - Rear wheel
     Refer to “REAR WHEEL INSTALLATION” section.

4. Adjust:
   - Drive chain slack

	Drive chain slack: **30 ~ 40 mm**

Refer to “DRIVE CHAIN SLACK ADJUSTMENT” in CHAPTER 3.

5. Install:
   - Fuel tank
   - Rear cowling
   - Seat

	Bolt (seat): **10 Nm (1.0 mkg)**

Refer to “SEAT, FUEL TANK AND REAR COWLING” section in CHAPTER 3.

DRIVE CHAIN, DRIVE SPROCKET AND REAR WHEEL SPROCKET

NOTE:
Before removing the drive chain, drive sprocket and rear wheel sprocket, it is necessary to measure the free play and length of the 10 links in the chain.

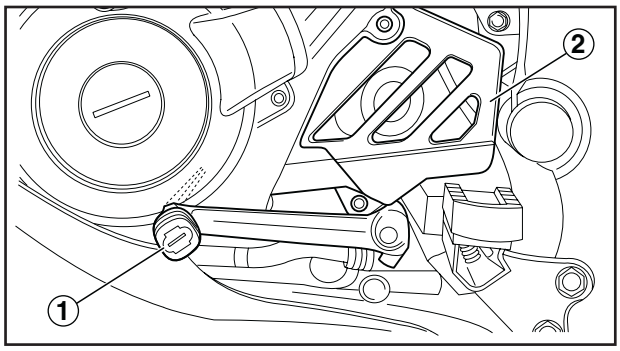

DRIVE CHAIN REMOVAL

1. Park the motorcycle upright on an even surface.
2. Remove:
   - Shift pedal (1)
   - Cover (2) (drive sprocket)

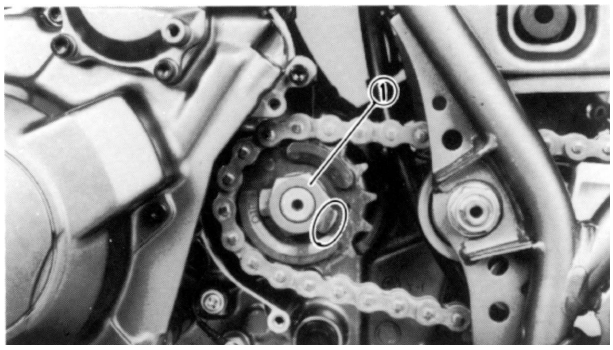

3. Remove:
   - Drive sprocket (1)

NOTE:
- Before removing the sprocket nut, straighten the tab on the lock washer.
- Loosen the nut with the rear brake pulled.

4. Raise the rear wheel placing a suitable support under the engine.

WARNING

Set the motorcycle up securely to prevent it falling over.

5. Remove:
   - Rear wheel
   - Rear wheel sprocket
   - Hub
   - Damper
   - Spacer
     Refer to “REAR WHEEL REMOVAL” section.

6. Remove:
   - Swingarm
   - Drive chain
     Refer to “REAR SHOCK ABSORBER REMOVAL” and “SWINGARM REMOVAL” sections.

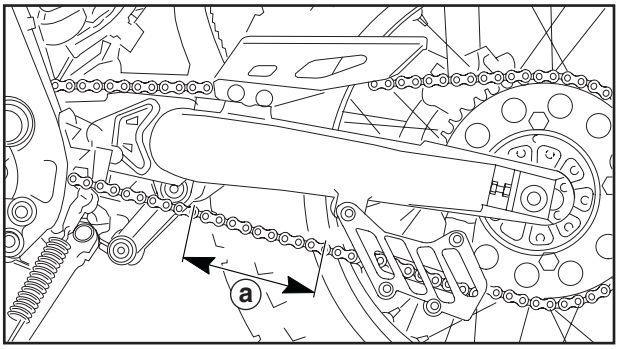

DRIVE CHAIN INSPECTION

1. Measure:
   - Length of 10 links (drive chain)
     Out of specification → Replace drive chain.

Maximum lenght of 10 links (a):
150.2 mm

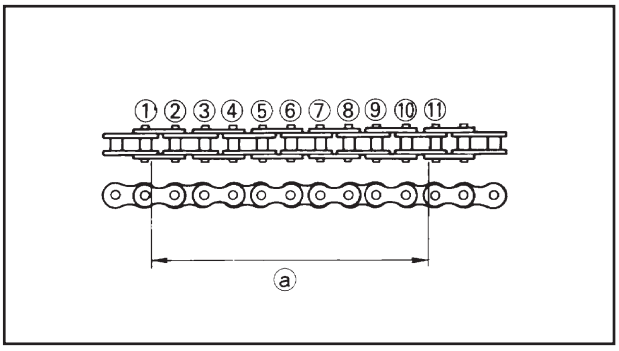

NOTE:

- Stretch the chain by hand to measure it.
- The length of the 10 links is recorded between the inside of the link pins (1) and (11) as shown.
- The length of the 10 links is measured at various points.

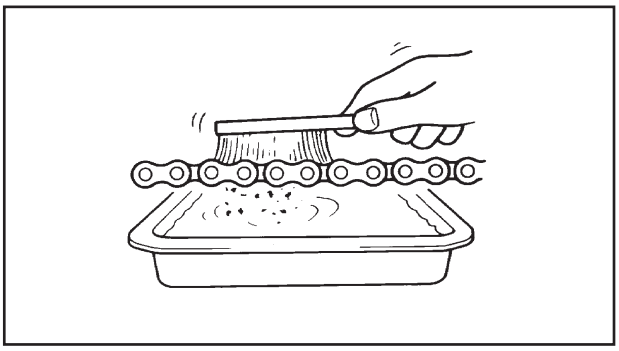

2. Clean:
   - Drive chain
     Immerge in kerosene and brush thoroughly to remove as much dirt as possible. Remove from kerosene and allow to dry.

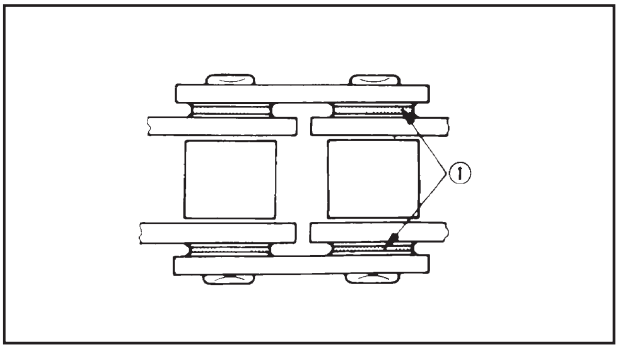

CAUTION:

This motorcycle is fitted with a chain with small O-Rings (1) fitted between its plates. Vapour cleaning, pressurised washing and certain types of solvents may damage these seal rings.
To clean the transmission chain use only kerosene.

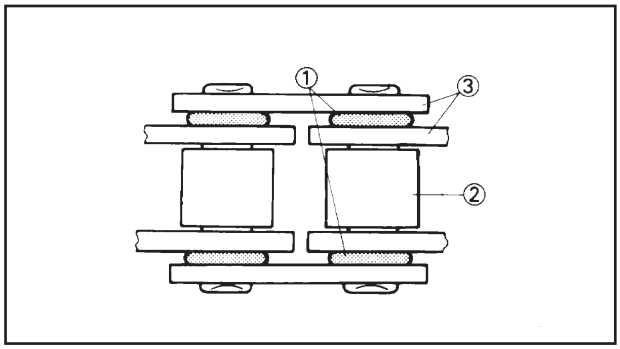

3. Inspect:
   - Seal rings (1) (drive chain)
     Damaged → Replace drive chain.
   - Rollers (2)
   - Lateral plates (3)
     Damage/Wear → Replace drive chain.
4. Lubricate:
   - Drive chain

Lubricant for drive chain:
SAE 80W/90 engine oil or special lubricant for O-Ring chains.

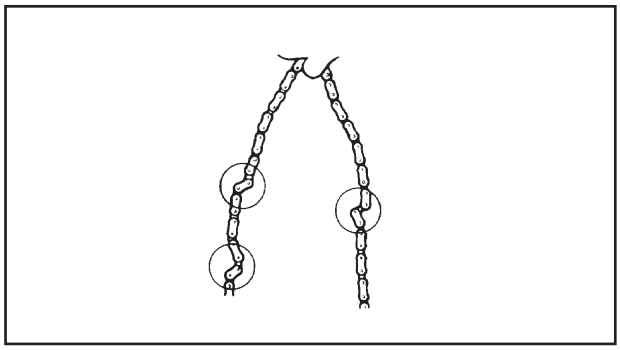

5. Inspect:
   - Drive chain
     Rigid → Clean and lubricate, replace if necessary.

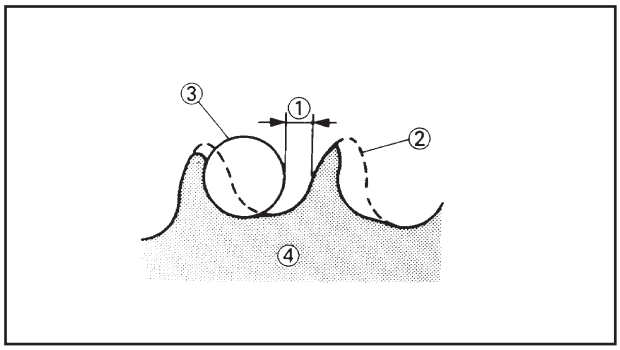

6. Inspect:
   - Drive sprocket
   - Rear wheel sprocket
     Wear over 1/4 tooth (1) → Replace.
     Teeth bent → Replace.

(2) Undamaged tooth profile
(3) Roller
(4) Sprocket

▼▼▼▼▼▼▼▼▼▼▼▼▼▼▼▼▼▼▼▼▼▼▼▼▼▼▼▼▼▼▼▼▼▼

How to replace the rear wheel sprocket:
With wheel removed:

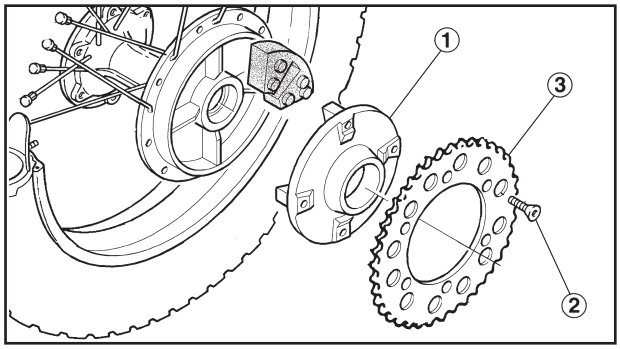

1. Remove:
   - Hub (1)
   - Sprocket fastening bolts (2)
   - Rear wheel sprocket (3)
2. Install:
   - New sprocket (3)
   - Sprocket fastening bolts (2)
   - Hub (1)

3. Tighten:
   - Rear wheel sprocket fastening bolts

Rear wheel sprocket fastening bolts:
48 Nm (4.8 mkg)

▲▲▲▲▲▲▲▲▲▲▲▲▲▲▲▲▲▲▲▲▲▲▲▲▲▲▲▲▲▲▲▲

DRIVE CHAIN INSTALLATION

Perform “REMOVAL” operations in reverse order. Pay special attention to the following points.

1. Install:
   - Drive chain
   - Swingarm

Nut (swingarm pivot shaft):
90 Nm (9.0 mkg)
Nut (frame-relay arm):
60 Nm (6.0 mkg)

2. Install:
   - Rear wheel
     Refer to “REAR WHEEL INSTALLATION” section.
3. Install:
   - Drive sprocket

Nut (drive sprocket):
110 Nm (11.0 mkg)

WARNING

Always use a new lock washer.

NOTE:

- Tighten the drive sprocket nut with the rear brake pulled.
- After tightening the nut, bend the tab on the lock washer once more over the faces of the nut.

4. Adjust:
   - Drive chain slack
     Refer to “DRIVE CHAIN SLACK ADJUSTMENT” section in CHAPTER 3.

Drive chain slack:
30 ~ 40 mm

5. Tighten:
   - Rear wheel axle nut

	Rear wheel axle nut: **115 Nm (11.5 mkg)**

Refer to “REAR WHEEL INSTALLATION” section.

7. Install:
   - Cover (drive sprocket)
   - Shift pedal

	Screws (drive sprocket cover): **10 Nm (1.0 mkg)** **Bolt (shift pedal):** **10 Nm (1.0 mkg)**

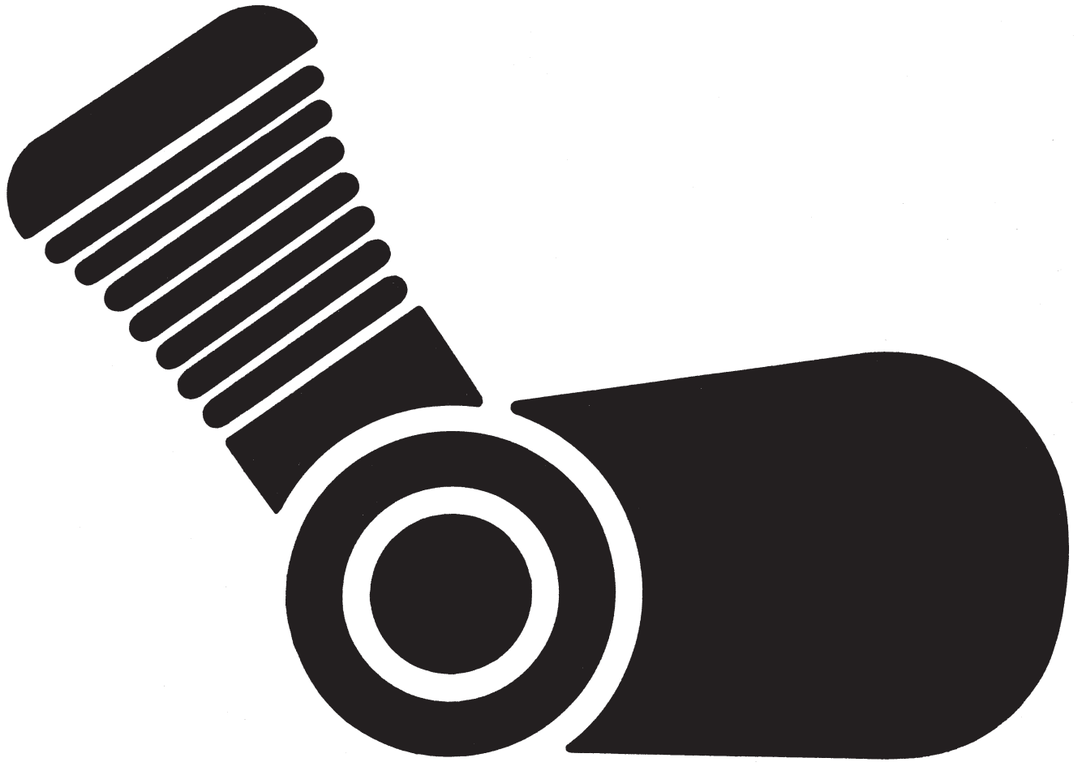

ENG 5

CHAPTER 5.

ENGINE

ENGINE REMOVAL 5-1
MUFFLER, EXHAUST PIPE, ENGINE PROTECTOR, DRIVE SPROCKET, CRANKCASE COVER, DRIVE SPROCKET AND SHIFT PEDAL 5-1
ENGINE MOUNTING BOLT 5-4

ENGINE DISASSEMBLY 5-5
CYLINDER HEAD, CYLINDER, CAMSHAFT AND PISTON 5-5
INTERMEDIATE STARTER GEAR, CRANKCASE COVER (L) AND GENERATOR STATOR 5-8
CRANKCASE COVER (R), CLUTCH, PRIMARY DRIVE GEAR AND BALANCER SHAFT GEAR 5-9
OIL PUMP AND SHIFT LEVER 5-12
AC GENERATOR AND TIMING CHAIN 5-13
CRANKCASE(R) 5-14
GEARBOX AND TRANSMISSION 5-16
BALANCER SHAFT AND CRANKSHAFT 5-17
OILSTRAINER 5-17
ROCKER ARMS 5-18
VALVES 5-19

INSPECTION AND REPAIR 5-21
CYLINDER HEAD 5-21
VALVES AND VALVE GUIDES 5-22
VALVESEAT 5-23
VALVE SPRINGS 5-27
CAMSHAFT 5-28
ROCKER ARMS AND ROCKER SHAFT 5-28
CAMSHAFT CHAIN AND SPROCKET 5-29
CAMSHAFT CHAIN GUIDE 5-30
CYLINDER AND PISTON 5-30
PISTON RINGS 5-32
PISTONPIN 5-33
CLUTCH 5-33
OILPUMP 5-35
PRIMARY TRANSMISSION 5-35
TRANSMISSION AND GEARBOX 5-36
SHIFT SHAFT AND STOPPER LEVER 5-37
STARTER TRANSMISSION 5-38
CRANKSHAFT 5-39
BALANCER SHAFT DRIVE AND DRIVEN GEARS 5-40
CRANKCASE 5-40
BEARING AND OIL SEAL 5-40

ENGINE ASSEMBLY AND SETTING 5-41
VALVES AND ROCKER ARMS 5-41
VALVES 5-42
ROCKER ARMS 5-43
CRANKSHAFT AND BALANCER SHAFT 5-44
TRANSMISSION. 5-46
GEARBOX 5-47
TRANSMISSION AND GEARBOX. 5-48
ENGINE OIL PUMP AND OIL STRAINER 5-49
CRANKCASE 5-50
ENGINE OIL STRAINER. 5-51
CRANKCASE 5-51
SHIFT SHAFT AND OIL PUMP 5-52
TIMING CHAIN 5-54
PISTON AND RINGS 5-55
CYLINDER 5-56
CYLINDER HEAD. 5-57
CAMSHAFT AND TIMING CHAIN 5-58
PISTON, CYLINDER, CYLINDER HEAD AND CAMSHAFT. 5-59
AC GENERATOR.. 5-65
OIL FILTER AND OIL HOSES 5-67
BALANCER SHAFT GEAR AND PRIMARY
TRANSMISSION GEAR 5-68
CLUTCH. 5-70
STARTER GEARS 5-73
STARTER NEUTRAL GEAR AND CRANKCASE COVER (L) 5-74

ENGINE REASSEMBLY. 5-76

ENGINE

ENGINE REMOVAL

MUFFLER, EXHAUST PIPE, ENGINE PROTECTOR, DRIVE SPROCKET CRANKCASE COVER, DRIVE SPROCKET AND SHIFT PEDAL

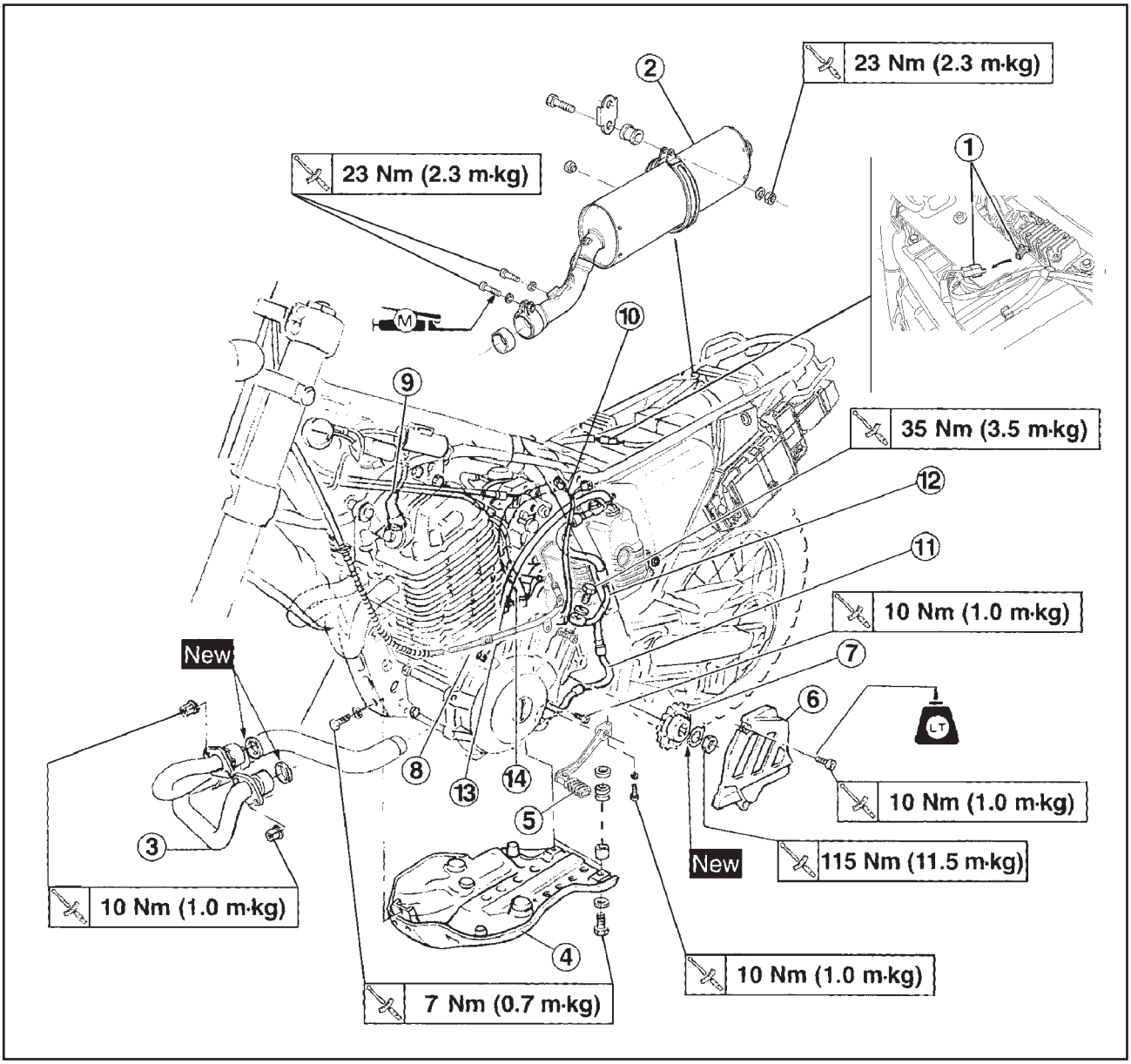

Order	Job name/Part name	Q.ty	Remarks
	Muffler, exhaust pipe, engine protector, drive sprocket crankcase cover, drive sprocket and shift pedal removal		Remove the parts in order. Park the motorcycle in a stable and level position. **WARNING** **Securely support the motorcycle so there is no danger of it falling over.**

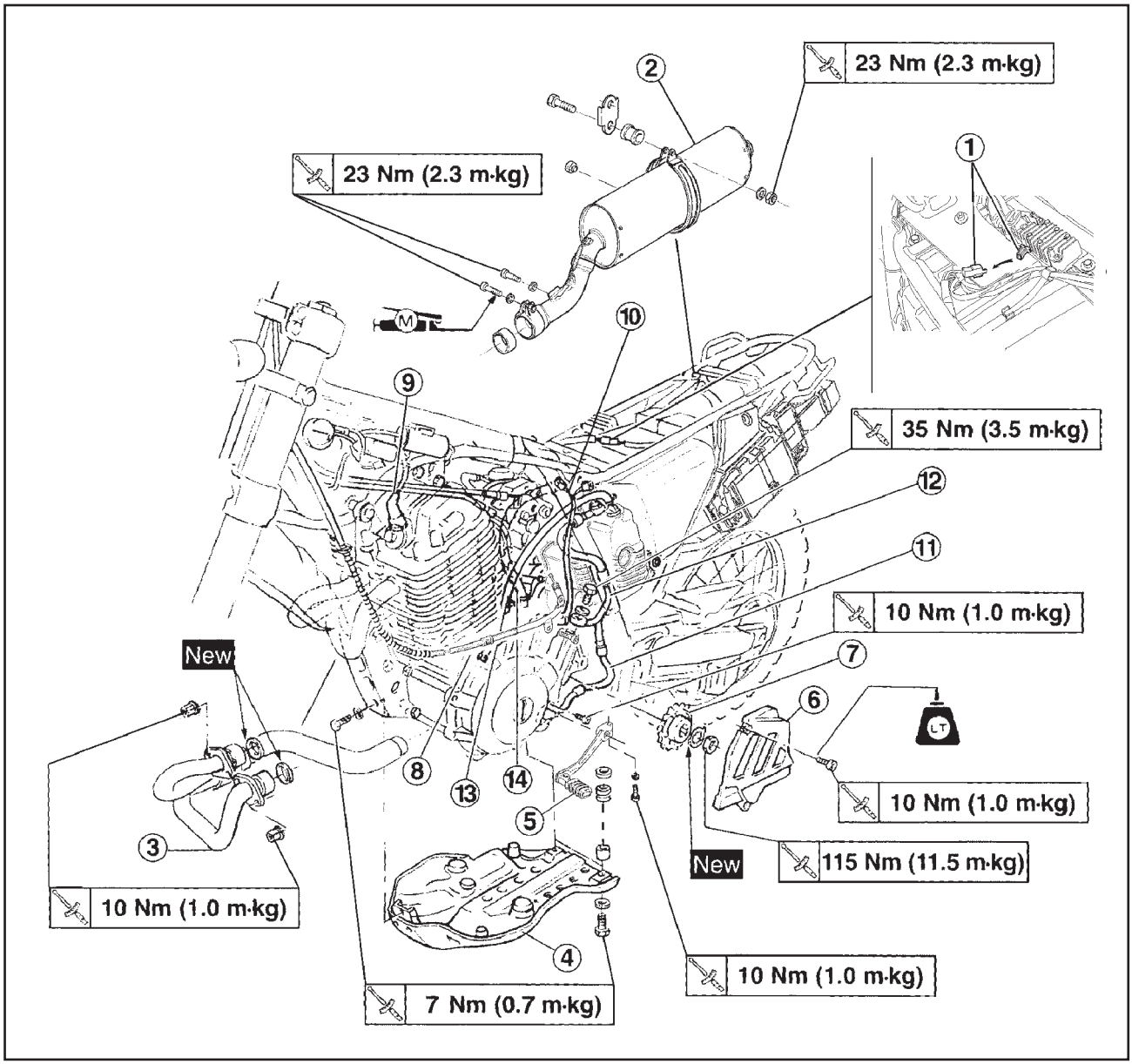

Order	Job name/Part name	Q.ty	Remarks
			Drain the engine oil (refer to “ENGINE OIL REPLACEMENT” section in CHAPTER 3). Remove the seat, the fuel tank and the rear cowling (refer to “SEAT, FUEL TANK AND REAR COWLING” section in CHAPTER 3).
1	Battery leads connector	1	Disconnect.
2	Muffler	1	
3	Exhaust pipe	1	
4	Engine protector	1	
5	Shift pedal	1	
6	Drive sprocket crankcase cover	1	
7	Drive sprocket	1	Displace the drive chain.
8	Clutch cable	1	Disconnect.
9	Plug cap	1	Disconnect.

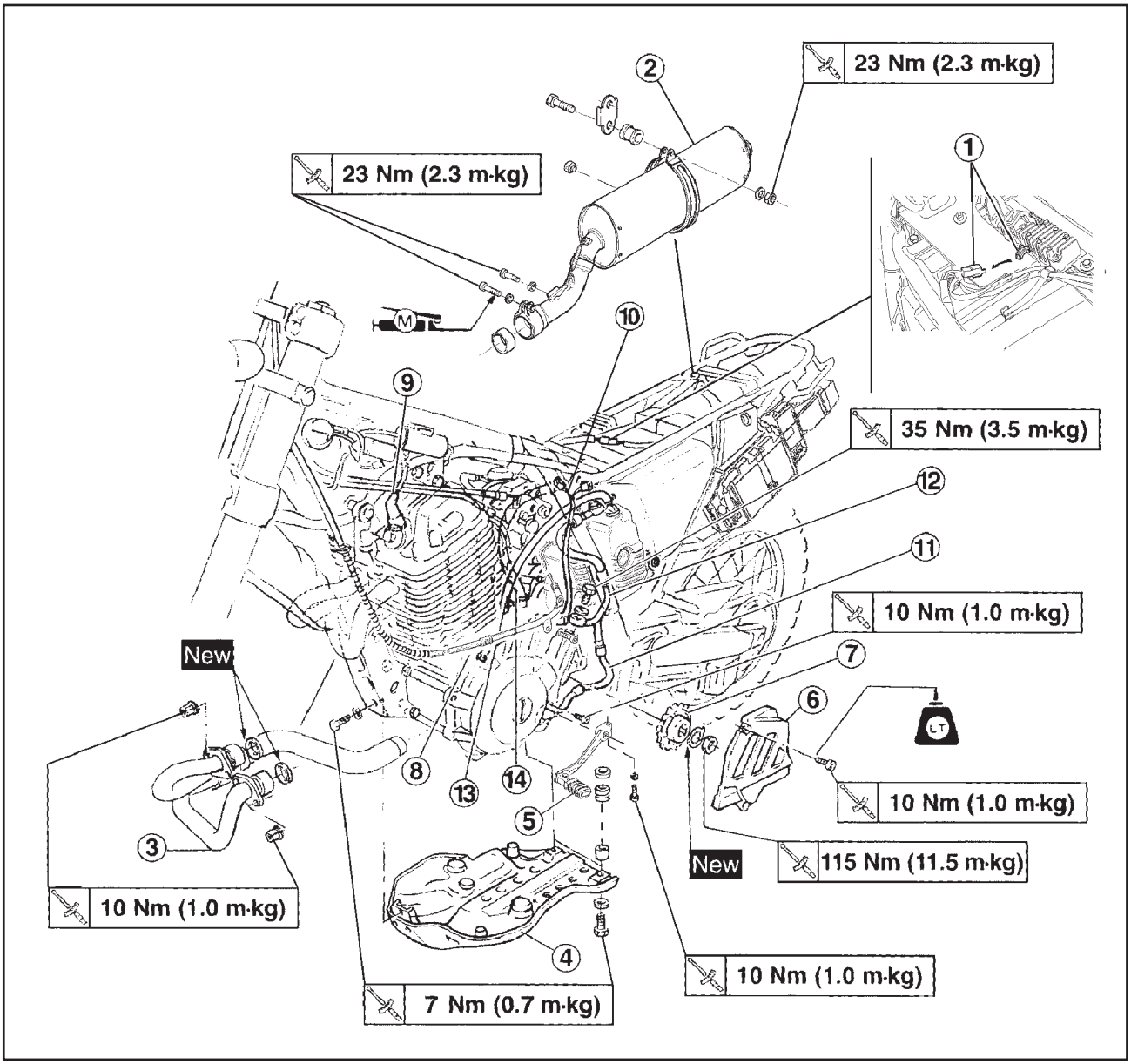

Order	Job name/Part name	Q.ty	Remarks
–	Starter leads	2	Disconnect.
–	Starter	1	Remove.
10	Connectors of engine wire harness	2	Disconnect.
11	Oil delivery hose	1	Disconnect.
12	Oil return hose	1	Disconnect.
13	Oil breather pipe (to oil tank)		– Disconnect.
14	Oil breather pipe (to air filter box)	–	Disconnect. Reverse the removal procedure for installation.

ENGINE MOUNTING BOLT

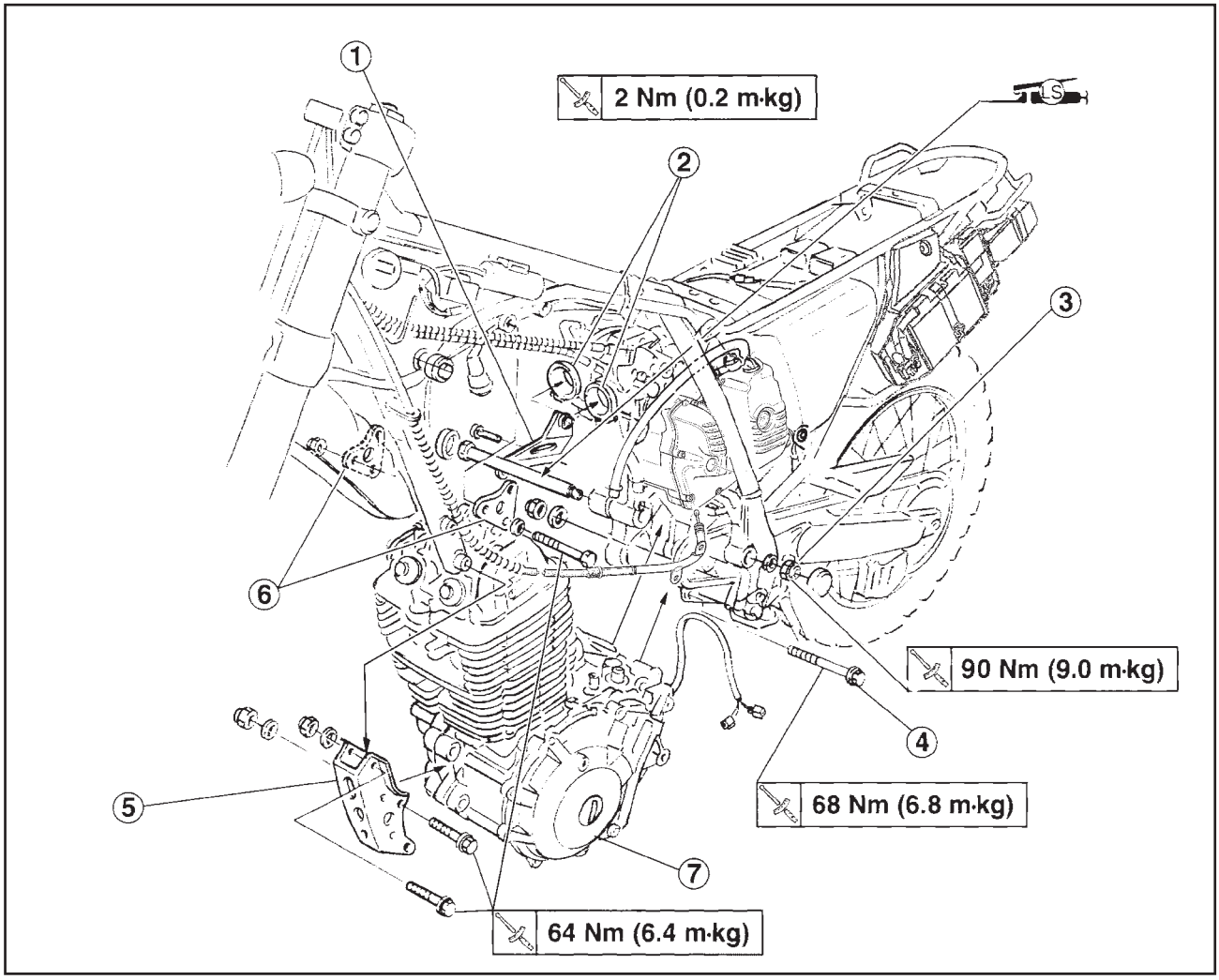

Order	Job name/Part name	Q.ty	Remarks
			CAUTION: **The engine and rear arm are assembled together on the rear pivot shaft. When removing the pivot shaft, it is thus necessary to pay special care with the rear arm.**
1	Stay of oil tank	–	Remove the mounting screws (to engine).
2	Hose clamp (carburetor)	2	Loosen.
3	Pivot shaft (rear - top)	1	
4	Engine mounting bolt (rear - lower)	1	
5	Engine stay (front - lower)	1	**NOTE:** Remove the engine from the lower side.
6	Engine stay (front - top/right/left)	1	
7	Engine assembly	1	Reverse the removal procedure for installation.

ENGINE DISASSEMBLY

CYLINDER HEAD, CYLINDER, CAMSHAFT AND PISTON

NOTE:

The cylinder head, cylinder, camshaft and piston can be examined with the engine installed by removing the following parts.

- Seat
- Fuel tank
- Rear cowling
- Carburetor
- Exhaust pipe

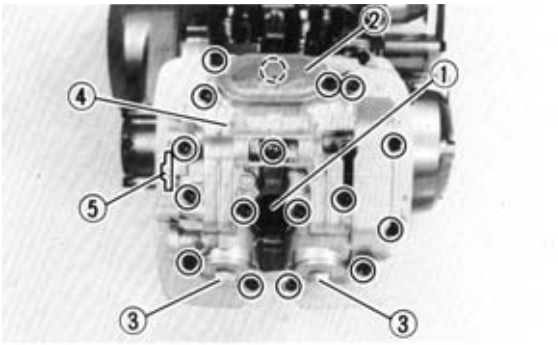

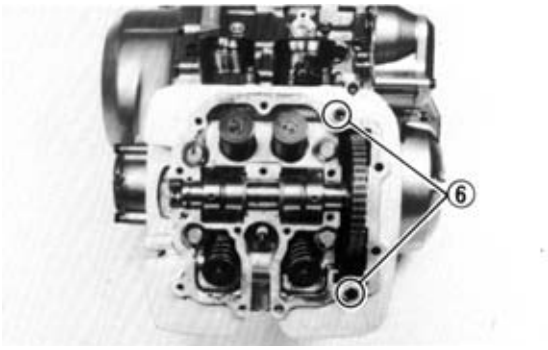

1. Remove:
   - Spark plug (1)
   - Tappet cover (2) (intake)
   - Tappet covers (3) (exhaust)
   - Cylinder head cover (4)
   - Cap (5)
   - Pins (6)

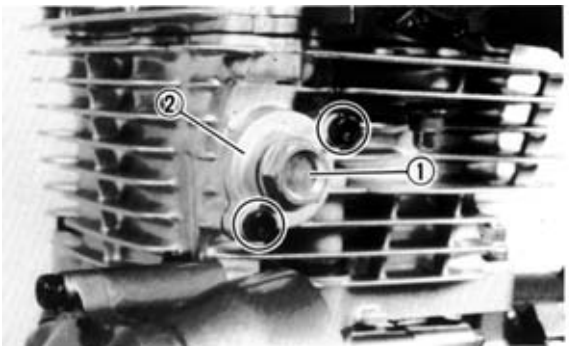

2. Loosen:
   - Bolt (1) (chain tensioner)
3. Remove:
   - Chain tensioner (2)

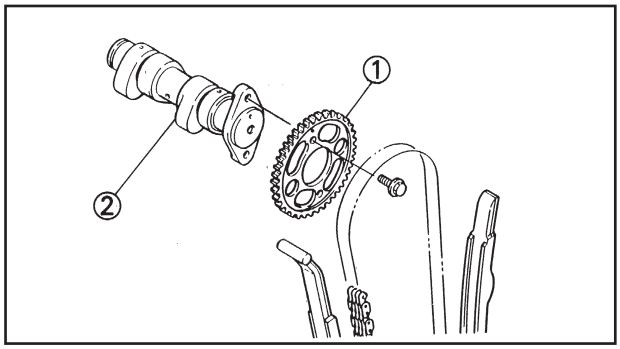

4. Remove:
   - Cam sprocket (1)
   - Camshaft (2)
   - Caps (left crankcase cover)

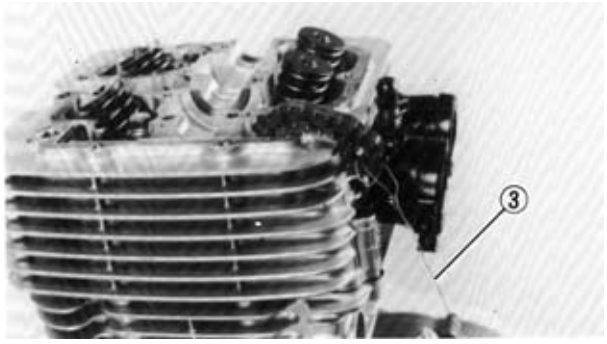

NOTE:
Fix a safety wire (3) to the timing chain to prevent it falling into the crankcase.

5. Remove:
   - Chain stopper guide (1)

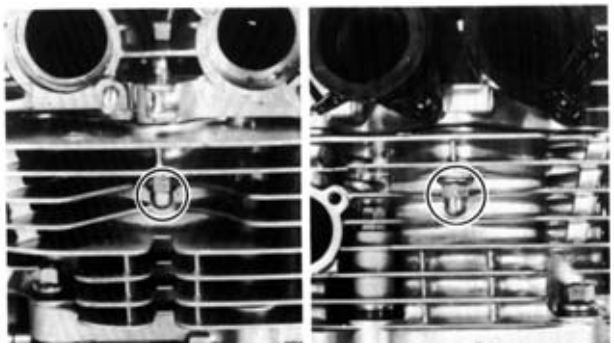

6. Remove:
   - Cylinder head

NOTE:
Loosen all bolts by a 1/4 turn and remove once all are loosened.

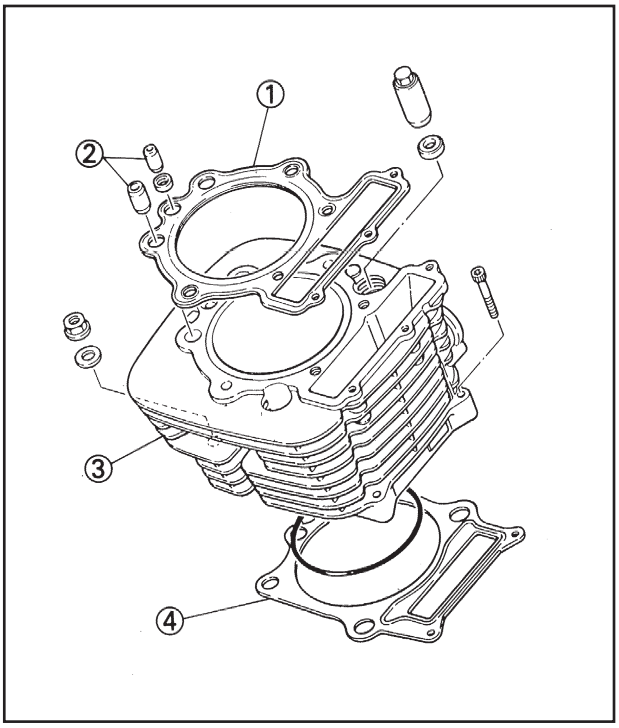

7. Remove:
   - Gasket (1) (cylinder head)
   - Pins (2)
   - Cylinder (3)
   - Gasket (4) (cylinder)

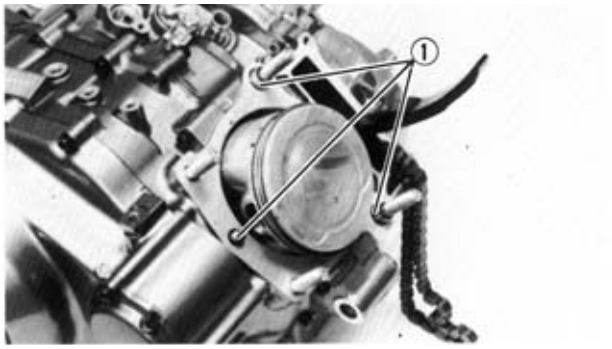

8. Remove:
   - Pins (1)

9. Remove:
   - Pin ring (1)

NOTE:
Before removing the pin ring, cover the crankcase with a clean cloth to prevent the ring falling into the crankcase cavity.

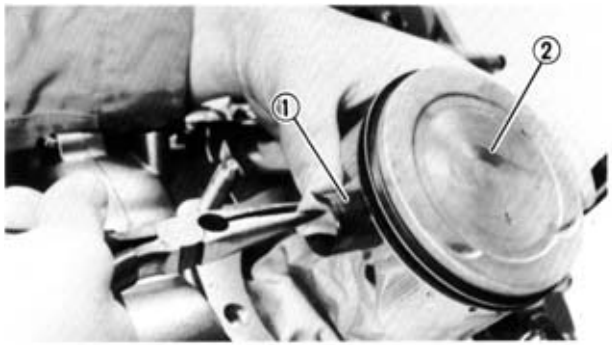

10. Remove:
    - Pin (1)
    - Piston (2)

NOTE:
Before removing the pin, burr the pin housing groove. If it is hard to pull out the pin even with the groove burred, use the pin puller.

Piston pin puller set:
P/N. 90890-01304

CAUTION:

Avoid using the hammer to pull the pin out.

INTERMEDIATE STARTER GEAR, CRANKCASE COVER (L) AND GENERATOR STATOR

NOTE:

With the engine installed, maintenance of the intermediate starter gear and the crankcase cover (L) may be performed by removing the following parts.

- Exhaust pipe
- Starter
- Sprocket cover

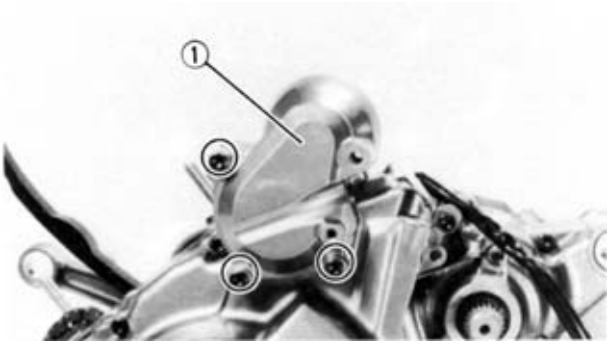

1. Remove:
   - Cover (1) intermediate starter gear
   - Centring pins
   - Gasket

2. Remove:
   - Intermediate starter gear (1)
   - Bearing (2)
   - Distributor shaft (3)

3. Remove:
   - Neutral gear switch cable (1)

4. Remove:
   - Crankcase cover gasket (1) (L)
   - Centring pins
   - Seal ring and O-ring
   - Gasket

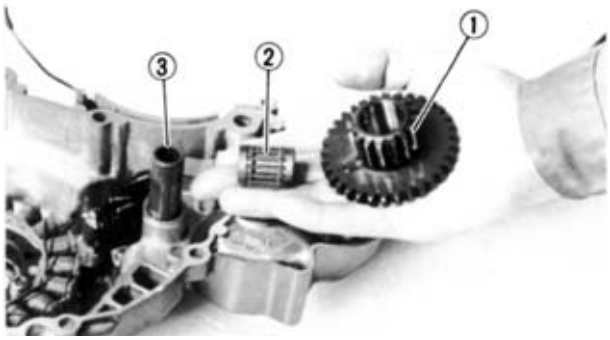

5. Remove:
   - Intermediate starter gear (1)
   - Bearing (2)
   - Distributor shaft (3)

6. Remove:
   - Cable clamp (1)
   - Coil (2)
   - Stator (3)

CRANKCASE COVER (R), CLUTCH, PRIMARY DRIVE GEAR AND BALANCER SHAFT GEAR

NOTE:

The clutch, the primary gear and the balance gear may be inspected with the engine installed by removing the following parts.

- Footrest (R)
- Oil delivery hose screw

1. Remove:
   - Engine oil delivery hose screw
   - Copper washer
   - Oil filter cover (1)
   - Oil filter
   - Seal ring and O-Ring
   - Crankcase cover (2) (R)

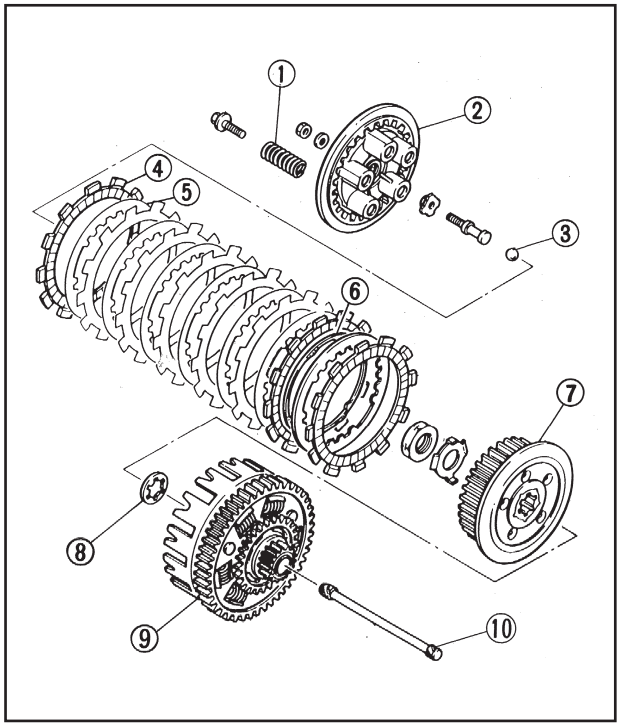

2. Remove:
   - Compression spring (1)
   - Pressure plate (2)
   - Ball (3)
   - Friction plate (4)
   - Clutch plate (5)
   - Clutch boss spring (6)
   - Clutch boss (7)
   - Thrust plate (8)
   - Clutch shroud (9)
   - Push rod (10)

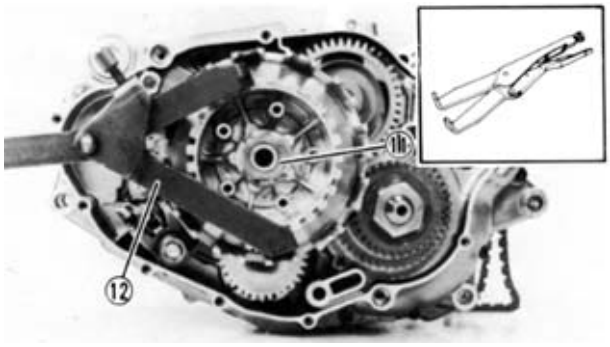

NOTE:
- Before loosening the nut (11) (clutch shroud), straighten the washer lock tab.
- To loosen the nut (clutch boss), block the clutch boss using the special tool (12).

	Clutch holding tool: **P/N. 90890-04086**

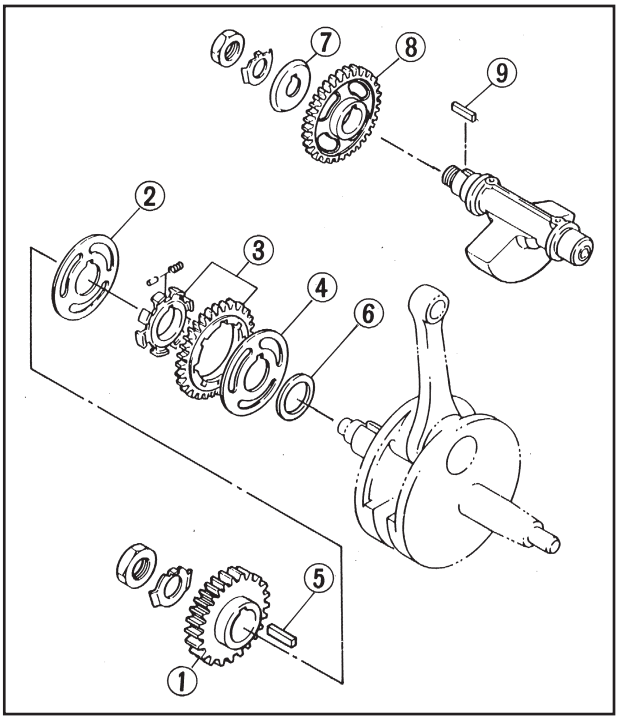

3. Remove
   - Primary drive gear (1)
   - Disc (2)
   - Balancer drive gear (3)
   - Disc (4)
   - Key (5)
   - Disc washer (6)
   - Disc (7)
   - Balancer gear (8)
   - Straight key (9)

NOTE:
Before loosening the nut (9) (primary drive gear) and nut (10) (balancer gear), straighten the wash lock tab.

NOTE:
To loosen nuts (9) and (10), hold the rotor (CA magneto) firmly in place using special tool (11).

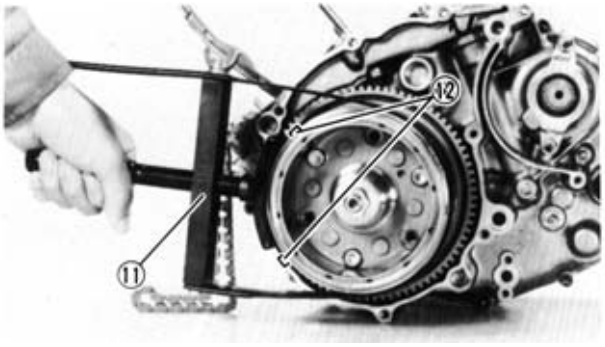

Sheave holder:
P/N. 90890-01701

CAUTION:
Be careful not to touch jutting edges (12) on the rotor with the sheave holder.

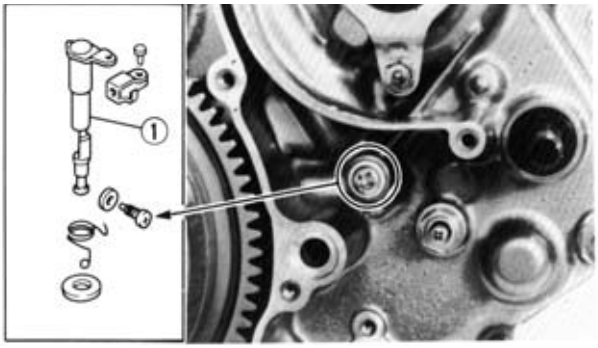

4. Remove:
   - Push lever (1)
   - Spring
   - Flat washer

NOTE:
Loosen the screw to remove the push rod.

OIL PUMP AND SHIFT LEVER

NOTE:

The oil pump and shift lever may be checked with the engine installed by removing the following parts:

- Footrest (R)
- Oil delivery hose screw
- Crankcase (R)
- Clutch

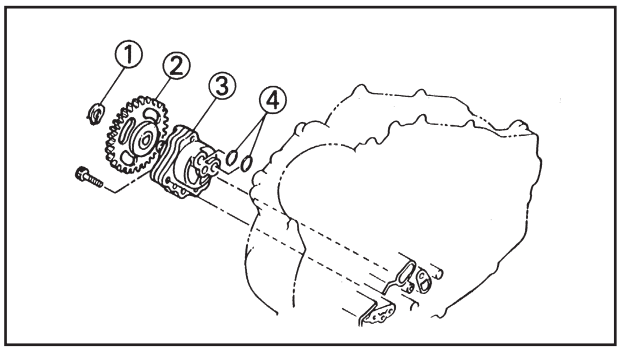

1. Remove:
   - Circlip (1)
   - Oil pump gear (2)
   - Oil pump (3)
   - O-rings (4)

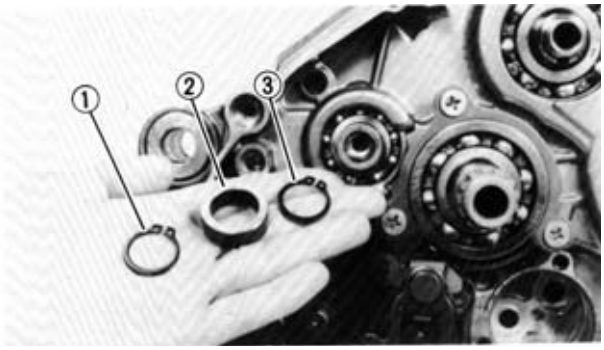

2. Remove:
   - Circlip (1) (from drive shaft)
   - Ring (2)
   - Circlip (3)

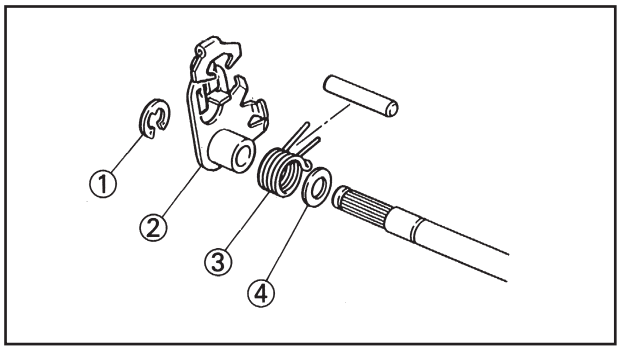

3. Remove:
   - Circlip (1)
   - Shift lever (2)
   - Spring (3)
   - Flat washer (4)

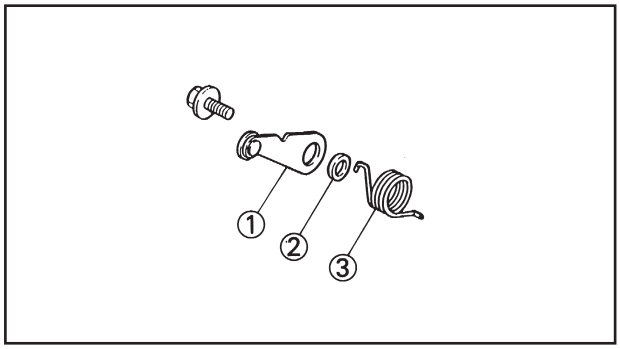

4. Remove:
   - Stopper lever (1)
   - Ring (2)
   - Spring (3)

AC GENERATOR AND TIMING CHAIN

NOTE:
The AC generator may be inspected with the engine installed by removing the following parts:
- Crankcase (L)

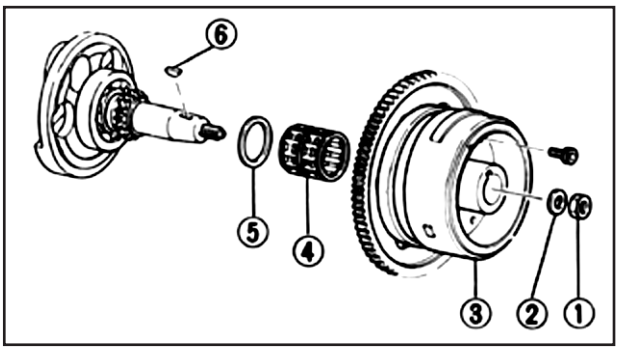

1. Remove:
   - Nut (1)
   - Washer (2)
   - Rotor (3) (with starter gear)
   - Bearing (4)
   - Shim adjustment washer (5)
   - Key (6)

NOTE:
To loosen the nut (rotor), lock the rotor with the special tool (7).

	Sheave holder: **P/N. 90890-01701**

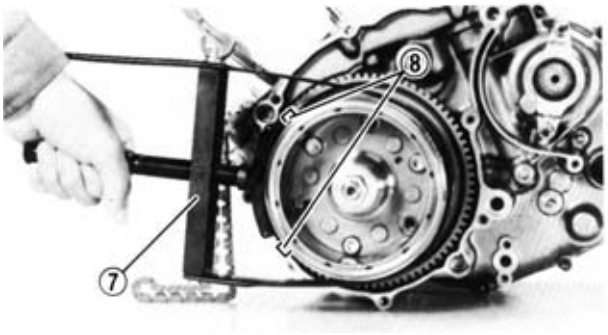

CAUTION:
Be careful not to touch the jutting edges (8) on the rotor with the special tool.

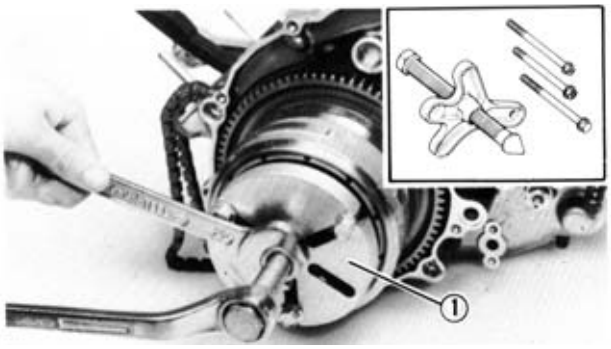

NOTE:
Remove the rotor with the puller (1).

	Flywheel puller: **P/N. 90890-01362**

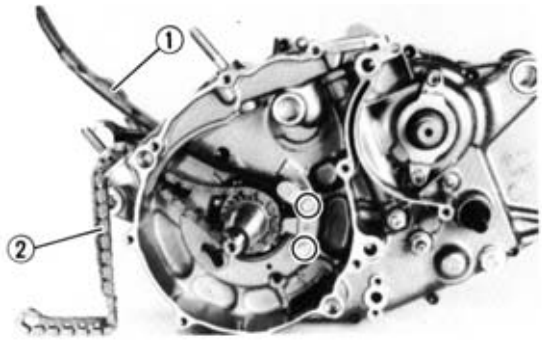

2. Remove:
   - Chain guide (1)
   - Timing chain (2)

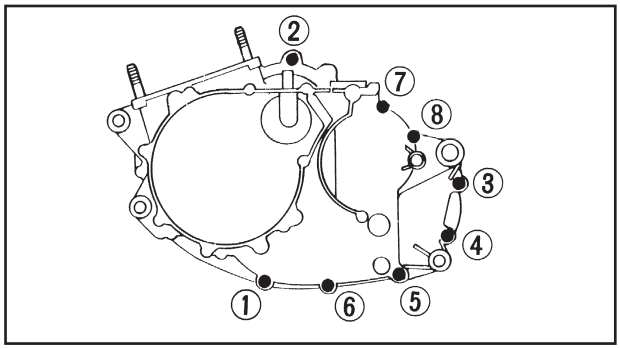

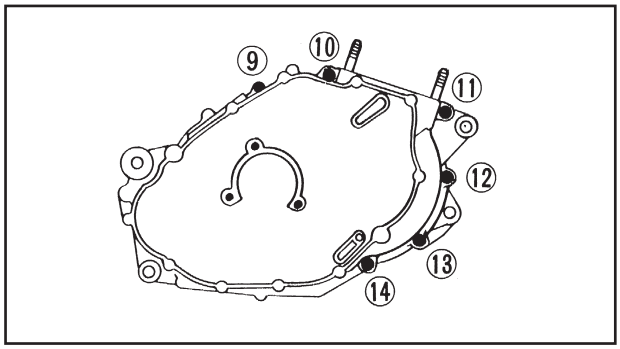

CRANKCASE (R)

1. Remove:
   - Crankcase (R)

NOTE:
- Loosen nuts starting from the one with the highest number.
- Loosen all by 1/4 turn and then remove.

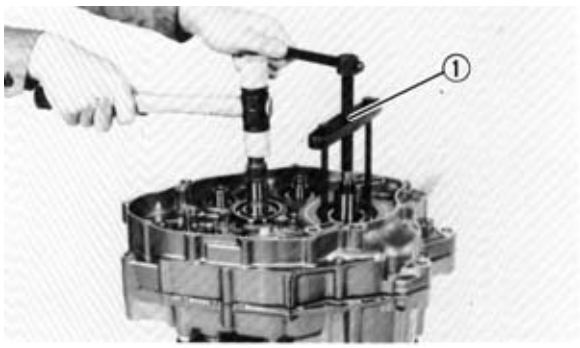

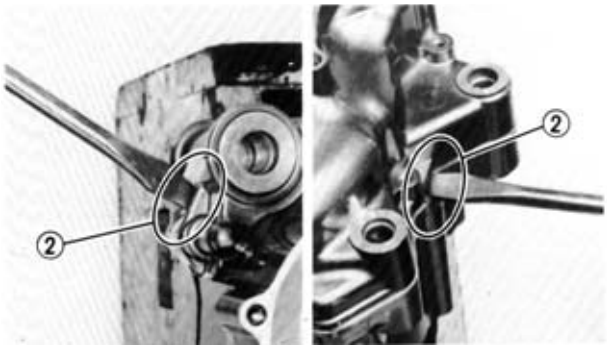

▼▼▼▼▼▼▼▼▼▼▼▼▼▼▼▼▼▼▼▼▼▼▼▼▼▼▼▼▼▼▼▼

Removal procedure:
- Set the crankcase separating tool (1) in place.

	Crankcase separating tool: **P/N. 90890-01135**

NOTE:
When tightening the support bolts of the separating tool, be sure to keep the tool body parallel to the engine crankcase. If necessary, a screw may be slightly loosened to put the tool body on level.

- Applying pressure, strike the front engine assembly flange, the drive shafts and the gear cam plate with a rubber hammer. Then remove the crankcase.

NOTE:
- If the crankcase fails come out, lever at points (2), being careful not to damage the crankcase.
- Turn the gear cam plate as shown in the figure to prevent it interfering with the crankcase.

CAUTION:

- **Be careful not to damage surfaces in contact with the crankcase.**
- **Use a soft hammer to hit the engine crankcase. Only hit the reinforced parts. Do not hit the surface in contact with the gasket. Work slowly and carefully. Be careful to perform the separation uniformly. If one end locks, remove pressure from the thrust screw, realign and recommence. If it is impossible to separate the crankcase, check that all screws and components have been disassembled. Do not use force.**

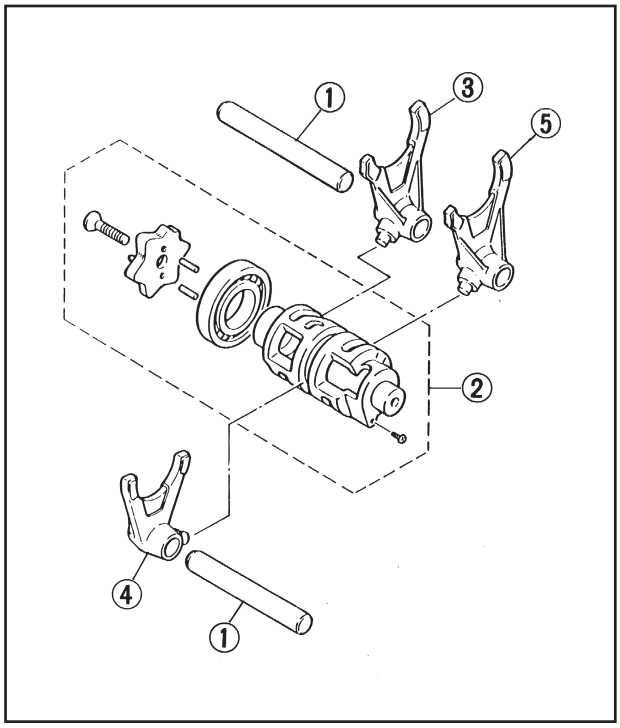

GEARBOX AND TRANSMISSION

1. Remove:
   - Guide bar (1)
   - Shift cam (2)
   - Selector fork # 3 (3)
   - Selector fork # 2 (4)
   - Selector fork # 1 (5)

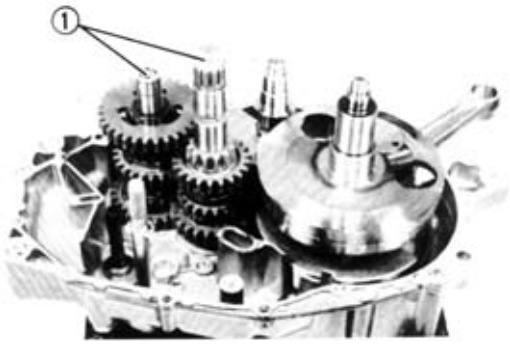

2. Remove:
   - Transmission assembly unit (1)

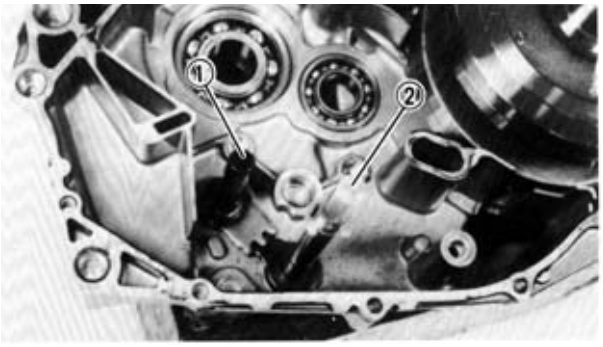

3. Remove:
   - Shift shaft # 1 (1)
   - Shift shaft # 2 (2)

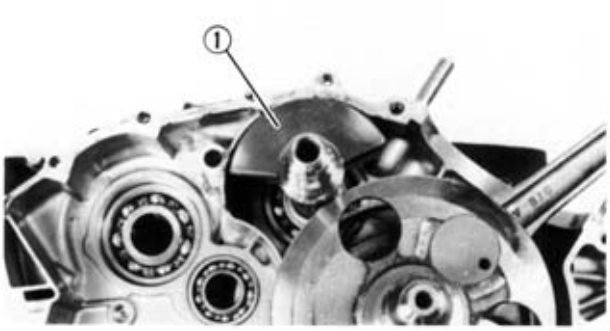

BALANCER SHAFT AND CRANKSHAFT

1. Remove:
   - Balancer shaft (1)

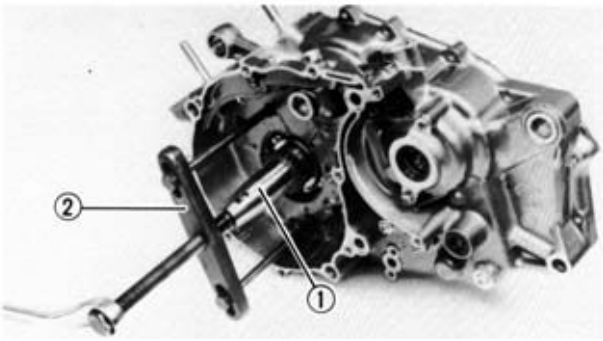

2. Remove:
   - Crankshaft (1)

NOTE:

- Remove the crankshaft by using the crankcase separating tool (2).

	Crankcase separating tool: P/N. 90890-01135

- Tighten the separating tool bolts, making sure that the tool body is parallel with the engine crankcase. If necessary, a screw may be backed out slightly to level tool body.

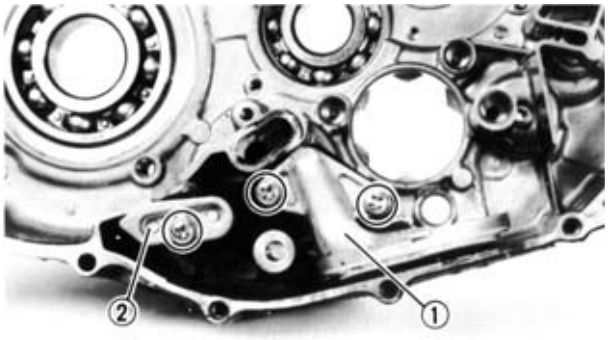

OIL STRAINER

NOTE:

It is advisable to replace the oil strainer every time the engine is disassembled.

1. Remove:
   - Oil strainer (1)
   - Oil passage cover (2)
   - Gasket

ROCKER ARMS

NOTE:
The rocker arms may be examined with the engine installed by removing the following parts.
- Seat
- Fuel tank
- Cylinder head cover

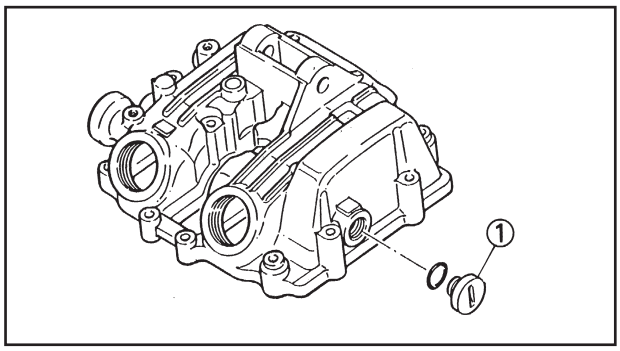

1. Remove:
   - Cap (1)

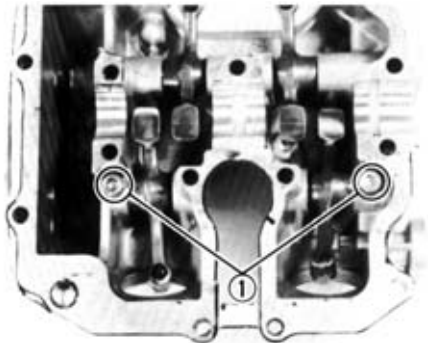

2. Remove:
   - Bolts (1) (rocker shaft)

3. Remove:
   - Rocker shaft
   - Rocker arms

NOTE:
Remove the rocker shaft using sliding hammer (1) and weight (2).

Sliding hammer bolt:
P/N. 90890-01083
Weight:
P/N. 90890-01084

VALVES

NOTE:
The valves may be inspected with the engine installed by removing the following parts.
- Seat
- Fuel tank
- Exhaust pipe
- Carburetor
- Cylinder head cover
- Cylinder head

1. Check:
   - Valve seal
     Leakage from valve seats' Inspect the valve surface, the seat and seat width.
     See section "VALVE SEAT INSPECTION AND REPAIR".

NOTE:
Check the valve seal before assembling the internal parts of the cylinder head (valves, valve springs, spring retainer etc).

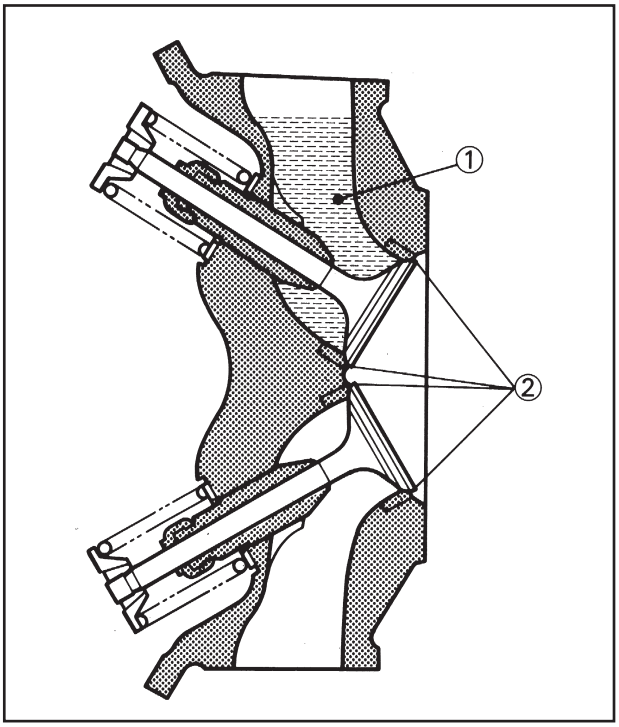

▼▼▼▼▼▼▼▼▼▼▼▼▼▼▼▼▼▼▼▼▼▼▼▼▼▼▼▼▼▼▼▼

Inspection steps:
- Pour clean solvent (1) into the intake and exhaust ports.
- Check the valve seal. There must be no blow-bys from the valve seats (2).

▲▲▲▲▲▲▲▲▲▲▲▲▲▲▲▲▲▲▲▲▲▲▲▲▲▲▲▲▲▲▲▲

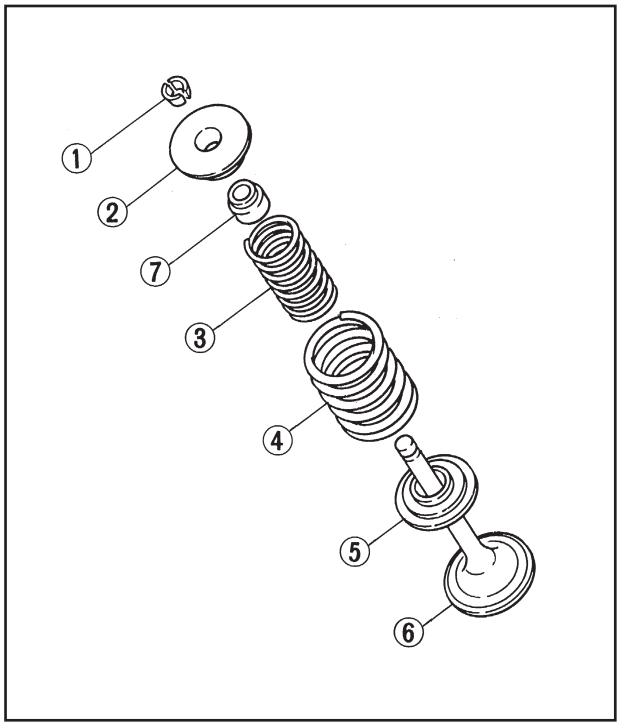

2. Remove:
   - Cotters (1)
   - Top spring retainer (2)
   - Internal spring (3)
   - External spring (4)
   - Lower spring retainer (5)
   - Valve (6)
   - Valve stem seal (7)

NOTE:
Mark each part and its position so that each may reassembled as before.

NOTE:
Compress the valve spring using tool (8) to remove the cotters.

	Valve spring compressor: **P/N. 90890-04019**

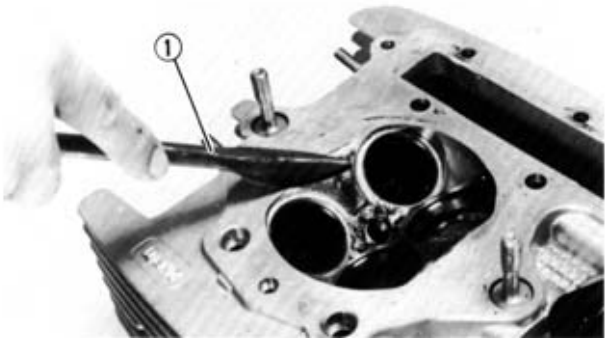

INSPECTION AND REPAIR

CYLINDER HEAD

1. Eliminate:
   - Carbon deposits
     (from combustion chamber)
     Use a rounded scraper (1).

NOTE:
Do not use a pointed tool to avoid damaging or scratching:
- spark plug thread
- valve seats
- combustion chamber

2. Inspect:
   - Cylinder head
     Scratches/Damage → Replace.
3. Measure:
   - Deformation
     Out of specification → Rework the surface.

	Cylinder head deformation: **Less than 0.03 mm**

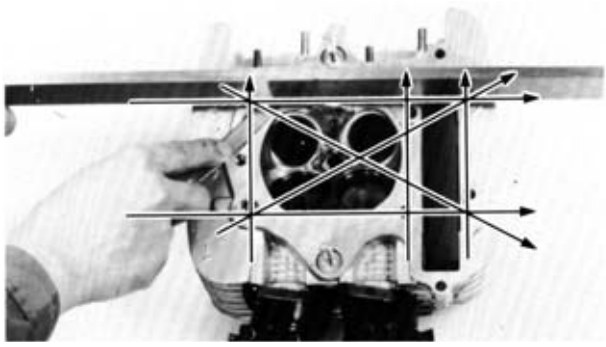

4. Surface:
   - Cylinder head

▼▼▼▼▼▼▼▼▼▼▼▼▼▼▼▼▼▼▼▼▼▼▼▼▼▼▼▼▼▼▼▼

Levelling:

Level the cylinder head with wet 400 ~ 600 emery paper in a figure-8 direction.

NOTE:
To avoid removing too much material on one side only, turn the cylinder head a number of times.

▲▲▲▲▲▲▲▲▲▲▲▲▲▲▲▲▲▲▲▲▲▲▲▲▲▲▲▲▲▲▲▲

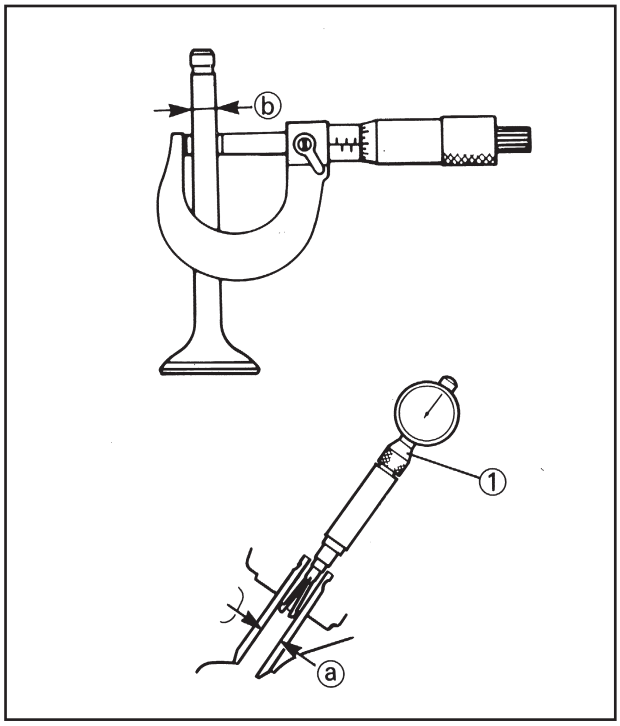

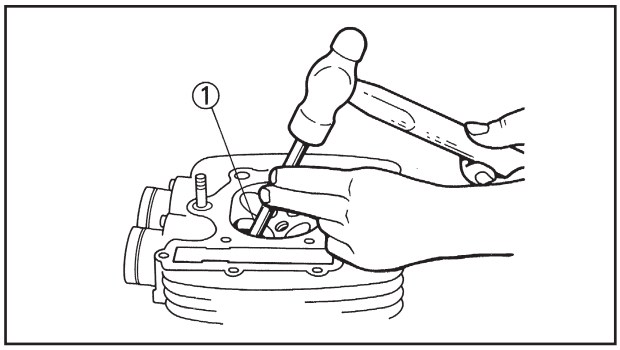

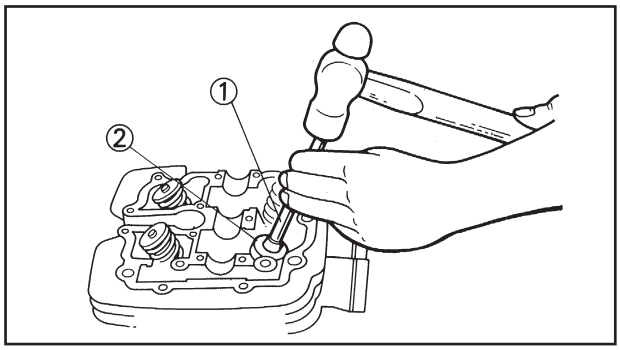

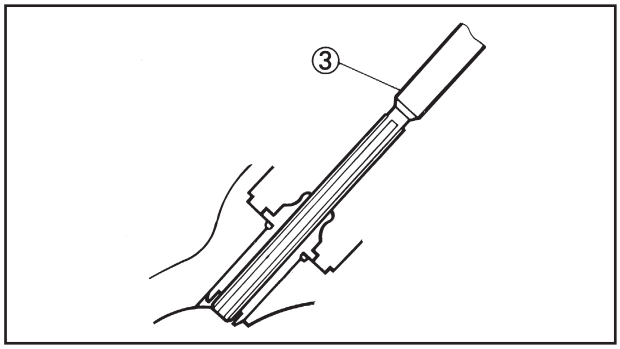

VALVES AND VALVE GUIDES

1. Measure:
   - Clearance between stem and guide

Clearance between stem and guide =
Internal diameter of valve guide (a) – Diameter of valve stem (b)

Out of specification → Replace valve guide.

Clearance between stem and guide:	
Intake:	0.010 ~ 0.037 mm <Limit>: 0.08 mm
Exhaust:	0.030 ~ 0.057 mm <Limit>: 0.10 mm

(1) Bore gauge

▼▼▼▼▼▼▼▼▼▼▼▼▼▼▼▼▼▼▼▼▼▼▼▼▼▼▼▼▼▼▼▼

Replacement steps:

NOTE:

Heat the cylinder head in an oven at 100°C to facilitate the removal and installation of the guides and to maintain correct locking interference.

- Remove the valve guide using the special punch (1).
- Install the new guide using the special installation tool (2).
- After installing the valve guide, bore with special tool (3) to obtain valve-guide free play.

Valve guide remover (7 mm):
P/N. 90890-01225
Valve guide installer:
P/N. 90890-04017
Valve guide reamer (7 mm):
P/N. 90890-01227

▲▲▲▲▲▲▲▲▲▲▲▲▲▲▲▲▲▲▲▲▲▲▲▲▲▲▲▲▲▲▲▲

2. Clean the valve surfaces of the carbon deposits.
3. Inspect:
   - Valve seal surface
     Pitting/Wear → Grind the valve seal surface.

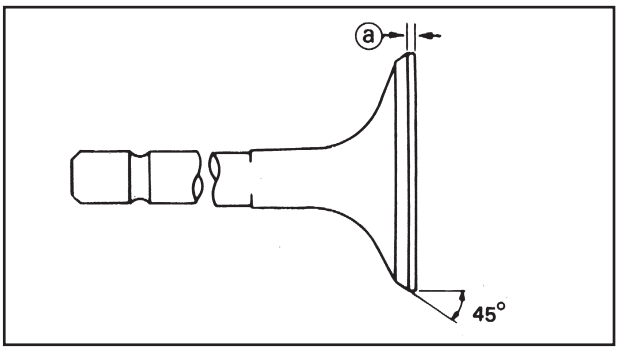

4. Measure:
   - Edge thickness (a)
     Out of specification → Replace valve.

Edge thickness (a):	
Intake:	**1.0 ~ 1.4 mm** **<Limit>: 0.8 mm**
Exhaust:	**0.8 ~ 1.2 mm** **<Limit>: 0.65 mm**

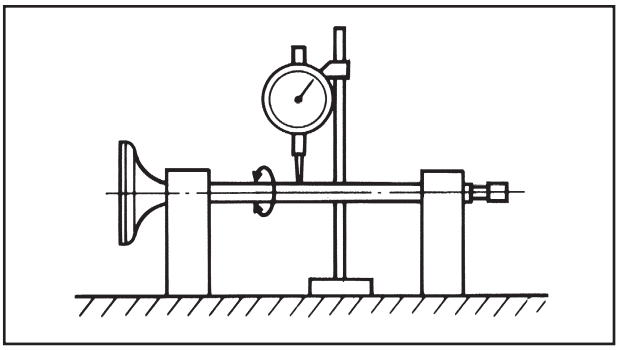

5. Check:
   - Valve stem tip
     Deformed, mushroom-shaped or with a higher diameter than the rest of the stem → Replace valve.
   - Misalignment:
     Out of specification → Replace valve.

Stem offsetting: <Limit>: 0.01 mm

NOTE:
- Changing the valve, replace also the valve guide.
- Pulling the valve out, replace the stem seal.

VALVE SEAT

1. Clean the valve surface and seat of carbon deposits.
2. Inspect:
   - Valve seat
     Pitting/Wear → Renew valve seat.

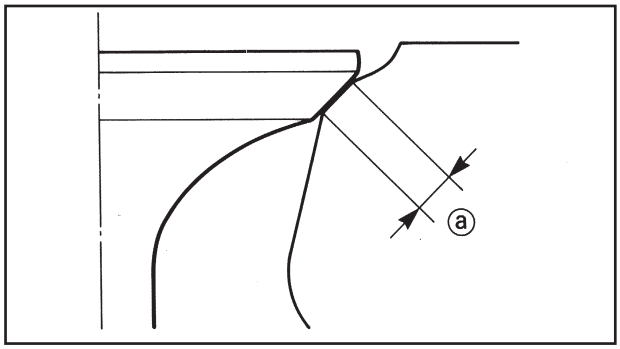

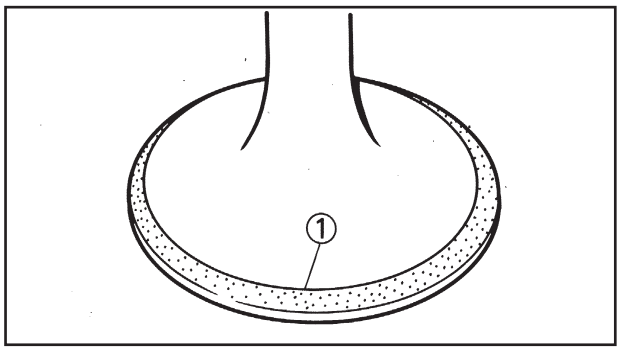

3. Measure:
   - Valve seat width (a)
     Out of specification → Renew valve seat.

Valve seat width (a):	
Intake:	**1.0 ~ 1.2 mm** **<Limit>: 1.8 mm**
Exhaust:	**1.0 ~ 1.2 mm** **<Limit>: 1.8 mm**

Measurement steps:

- Apply Prussian blue (Dykem) to the valve seat.
- Install the valve in the cylinder head.
- Press the valve onto the housing through the guide to leave a clear outline.
- Measure the width of the valve seat. Where there is contatc between valve and seat the Prussian blue is wiped away.
- If the valve seat is too narrow, wide or off-centre, the valve seat must be renewed.

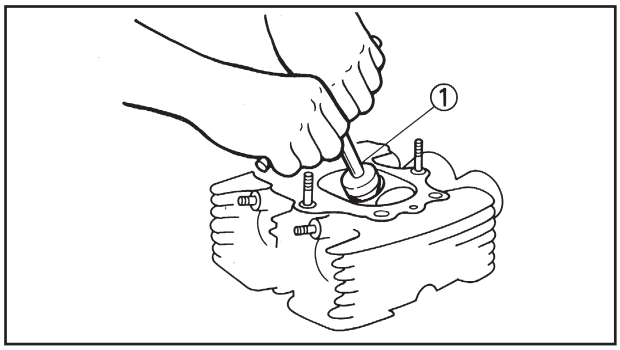

4. Renew:
   - Valve seat
     Use the special tool (1) to renew the valve seat with 30°, 45° and 60° mills.

CAUTION:

Turning the cutter, maintain uniform pressure (about 4-5 kg) to avoid leaving marks on the valve seat.

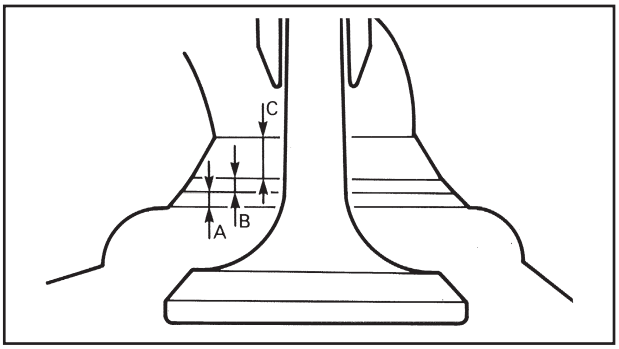

Mill the valve seat as follows:	
Section	**Cutter**
A	**30°**
B	**45°**
C	**60°**

Valve seat faults recorded by analysing the valve seal surface:

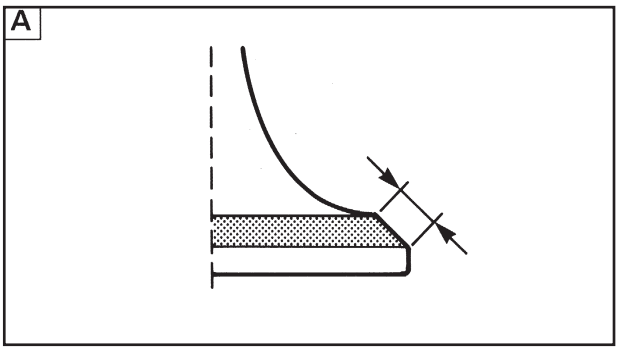

[A] If the valve surface resembles that shown in the figure, this means that the valve seat is centred on the surface but is too wide.

Intervention on the valve seat		Desired effect
Cutter type:	30°	Reduce valve seat width to 1.0 mm
	60°	

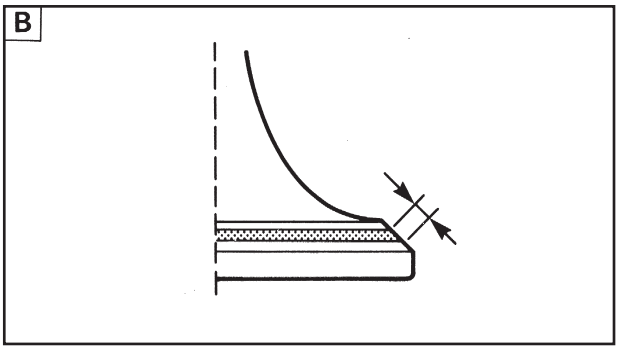

[B] If the valve surface is like this, it means that the valve seat is centred on the valve surface but is too narrow.

Intervention on the valve seat		Desired effect
Cutter type:	45°	Centring of seat and attainment of 1.0 mm width

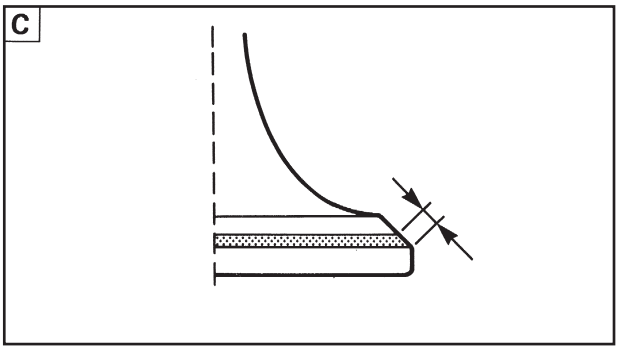

[C] If the valve surface is like this, it means that the valve seat is too narrow and close to the edge of the valve.

Intervention on the valve seat		Desired effect
Cutter type:	30° (before)	Centring of seat and attainment of 1.0 mm width
	45°	

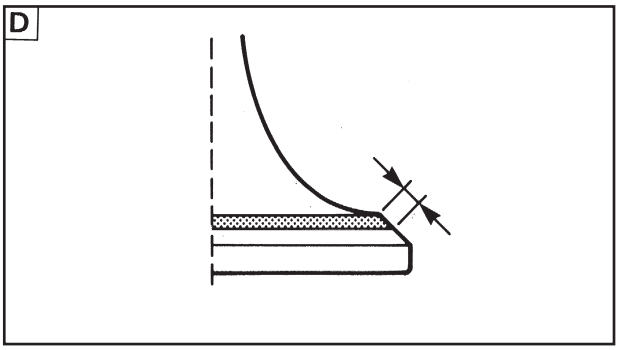

[D] If the valve surface is like this, it means that the valve seat is too narrow and situated low down near the lower edge of the valve surface.

Intervention on the valve seat		Desired effect
Cutter type:	60° (first)	Centring of seat and attainment of 1.0 mm width
	45°	

5. Emery:
   - Valve seal surface
   - Valve seat

NOTE:
If the valve seat is renewed or the valve and guide replaced, the valve seat and seal surface must be lapped.

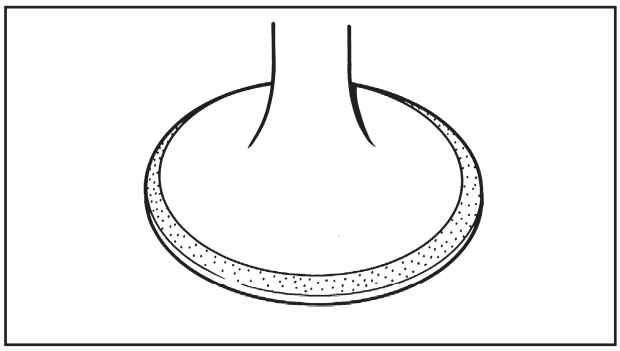

Lapping steps:

- Apply rough-lapping compound to the valve seal surface.

CAUTION:
Make sure the lapping compound does not run into the space between the guide and valve stem.

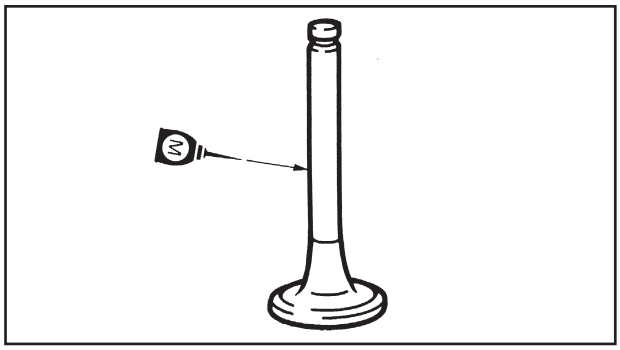

- Apply oil to the molybdenum disulfide on the valve stem.
- Install the valve in the cylinder head.

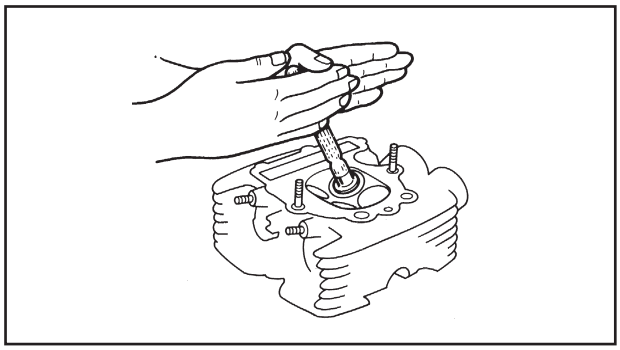

- Turn the valve until face and surface are not evenly polished. Then clean away all the lapping compound.

NOTE:
For best results, during lapping, repeatedly apply (light) pressure to the valve seat, turning the valve backwards and forwards by hand.

- Apply a fine-lapping compound on the valve seal surface and repeat the procedures described above.

NOTE:
Be sure to remove all the lapping compound from the valve surface after every lapping operation.

- Apply Prussian blue (Dykem) to the valve seal surface.
- Install the valve in the cylinder head.
- Press the valve onto the housing through the guide to leave a clear outline.
- Measure the valve seat width once more. If the width of the valve is out of specification alter and relap.

▲▲▲▲▲▲▲▲▲▲▲▲▲▲▲▲▲▲▲▲▲▲▲▲▲▲▲▲▲▲▲▲

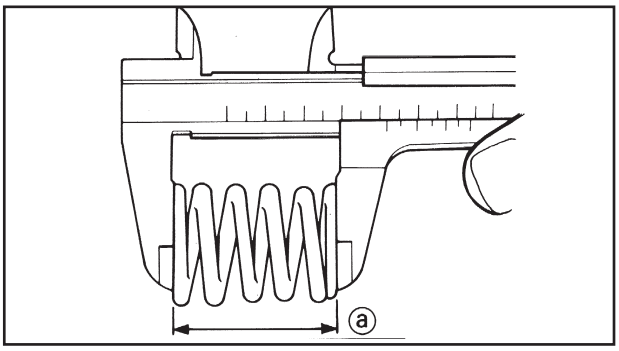

VALVE SPRINGS

1. Measure:
   - Free width of valve springs (a)
     Out of specification ➔ Replace.

Free width of valve springs (intake and exhaust):	
Internal spring	**External spring**
40.1 mm	**43.8 mm**

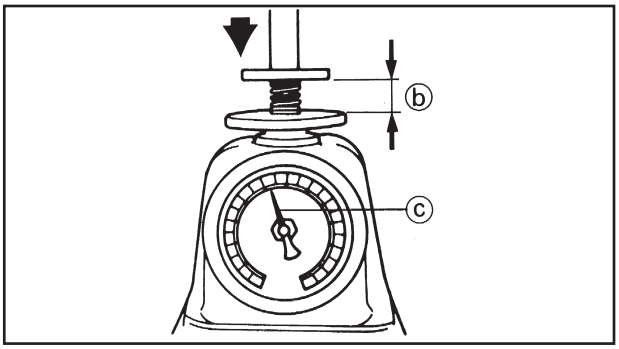

2. Measure:
   - Spring load
     Out of specification ➔ Replace.

(b) Length of loaded spring

Valve spring load:
Internal spring (intake and exhaust)
164.8 ~ 190.2 N
(16.80 ~ 19.39 kgf) at 22.7 mm
External spring (intake)
71.6 ~ 87.3 N
(7.3 ~ 8.9 kgf) at 34.2 mm
External spring (exhaust)
149.1 ~ 182.4 N
(15.2 ~ 18.6 kgf) at 34.2 mm

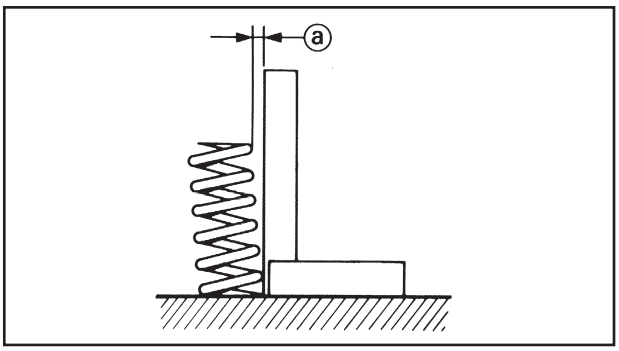

3. Measure:
   - Inclination of spring (a)
     Out of specification ➔ Replace.

Spring inclination limit:	
Internal spring	**External spring**
2.5°/1.7 mm	**2.5°/1.9 mm**

CAMSHAFT

1. Inspect:
   - Cam eccentrics
     Pitting/Scratches/Blue colour → Replace camshaft.

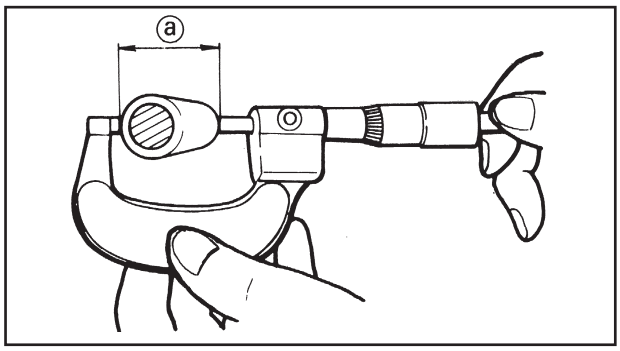

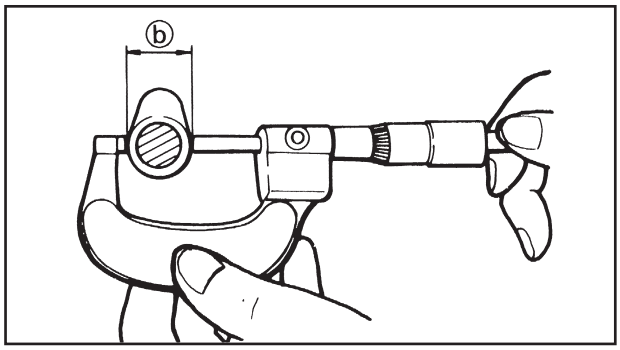

2. Measure:
   - Cam eccentrics
     Out of specification → Replace camshaft.

	(a)	(b)
Intake:	36.47~36.57 mm	30.06~30.16 mm
Exhaust:	36.62~36.72 mm	30.11~30.21 mm

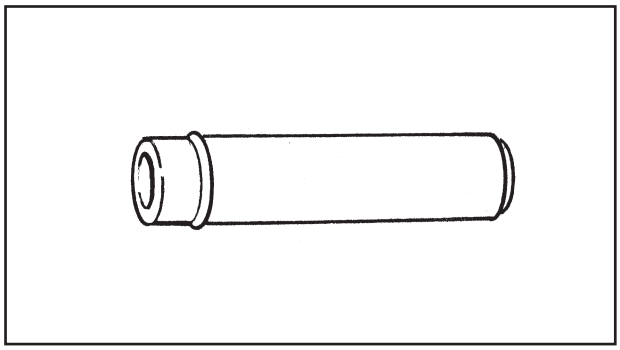

ROCKER ARMS AND ROCKER SHAFT

1. Inspect:
   - Rocker shafts
     Blue colour/Grooves → Replace shafts and check lubrication system.

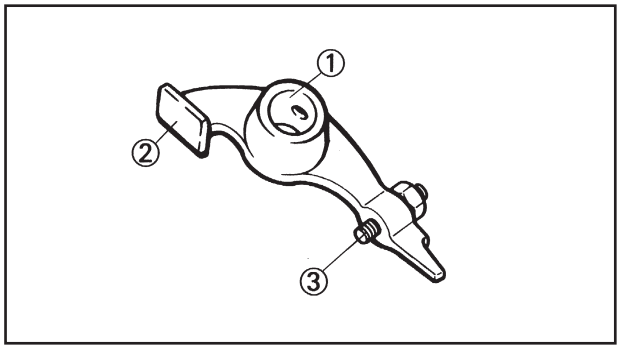

2. Inspect:
   - Rocker shaft slot (1)
   - Surface in contact with cam eccentric (2)
   - Adjuster surface (3)
     Pitting/Wear/Scratches/Blue colour → Replace and check lubrication system.

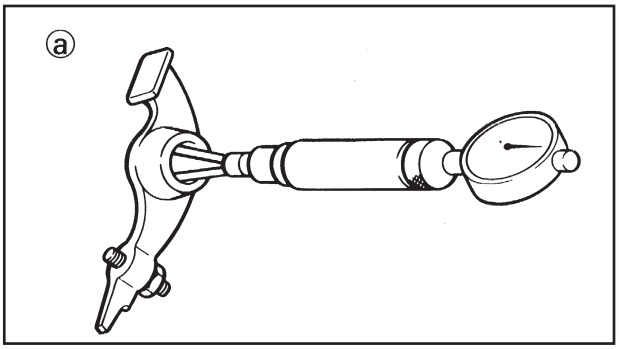

3. Measure:
   - Rocker arm-shaft clearance

Rocker arm-shaft clearance
Internal diameter (a) of rocker arm – External diameter (b) of shaft

Out of specification ➔ Replace whole unit.

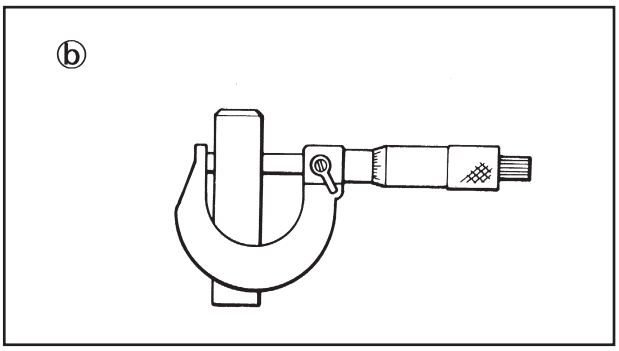

Rocker shaft clearance:
0.009 ~ 0.042 mm

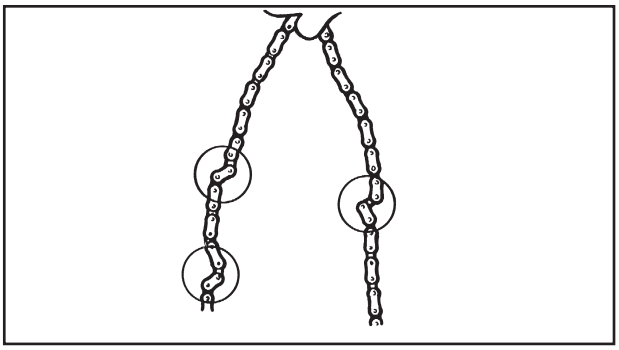

CAMSHAFT CHAIN AND SPROCKET

1. Inspect:
   - Chain
     Stiffness/Cracks ➔ Replace timing chain and sprocket.

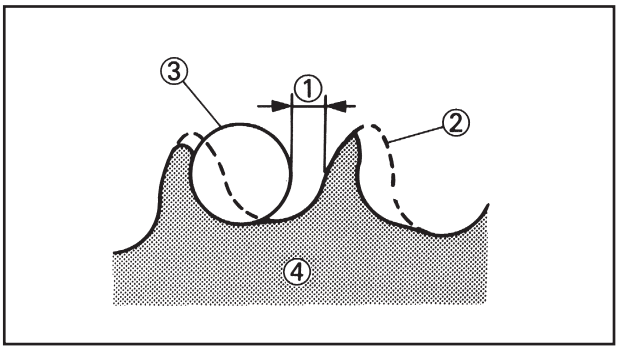

2. Inspect:
   - Sprocket
     Wear/Damage ➔ Replace timing chain and sprocket.

(1) 1/4 tooth (maximum)
(2) New sprocket tooth profile
(3) Roller
(4) Sprocket

CAMSHAFT CHAIN GUIDE

1. Inspect:
   - Side chain guide (exhaust) (1)
   - Side chain guide (intake) (2)
     Wear/Damage → Replace.

CYLINDER AND PISTON

1. Inspect:
   - Piston and cylinder walls
     Vertical scratches → Replace cylinder liner and piston.
2. Measure:
   - Piston-cylinder clearance

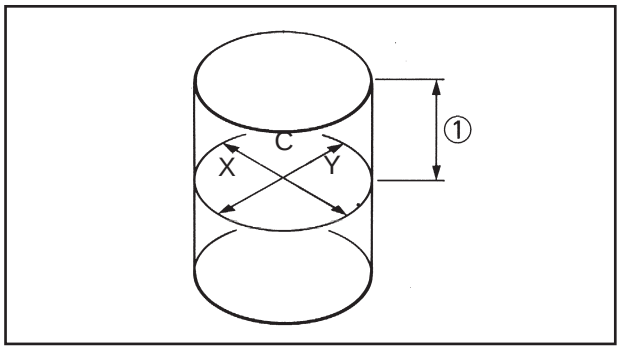

Measurement steps:

First step

- Measure cylinder bore “C” with a cylinder gauge.

(1) 50 mm from top of cylinder

NOTE:
Measure bore parallel and at right angles to the driving shaft. Then calculate average measurement.

	Standard	Wear limit
Cylinder bore “C”	94.97 ~ 95.02 mm	95.1 mm
$C = \frac{X + Y}{2}$		

- If the measurements are out of tolerance, replace the cylinder liner, piston and circlips all together.

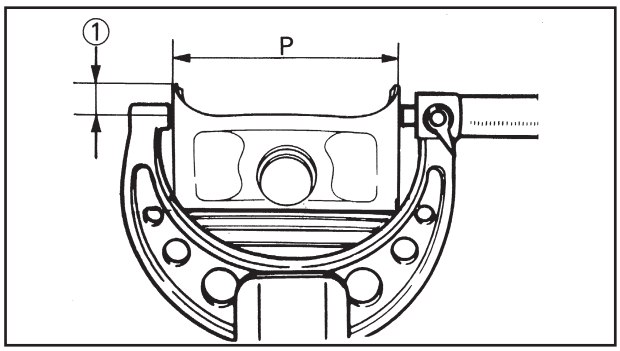

Second step

- Measure diameter “P” of the piston skirt with a micrometer.

(1) 5 mm from the lower edge of the piston

Piston “P” size:	
Standard	94.915 ~ 94.965 mm

- If the measurements are out of tolerance, replace the piston and circlips all together.

Third step

- Calculate the piston-cylinder free play according to the following formula.

Piston-cylinder clearance =
Cylinder boring “C” – **Piston skirt diameter “P”**

Piston-cylinder clearance:
0.045 ~ 0.065 mm
<Limit>: 0.15 mm

- If the measurements are out of tolerance, replace the cylinder liner, piston and circlips all together.

▲▲▲

PISTON RINGS

1. Measure:
   - Side clearance of rings
     Use a thickness gauge.
     Out of specification → Replace piston.

NOTE:
Before measuring side clearance, remove carbon deposits from the piston ring seats and from the rings themselves.

Piston ring side clearance (installed):	
Upper ring	**0.04 ~ 0.08 mm**
Lower ring	**0.03 ~ 0.07 mm**
<Limit>: 0.13 mm	
Oil scraper	**0.02 ~ 0.06 mm**

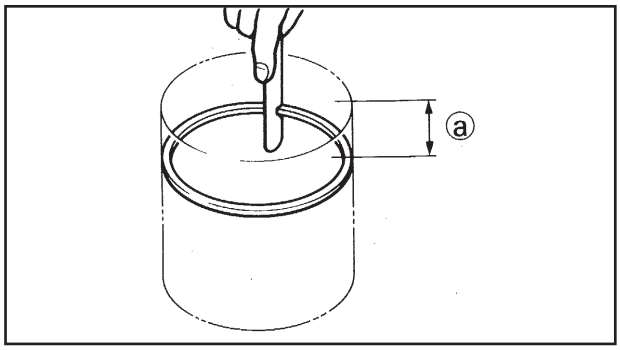

2. Install:
   - Ring (into the cylinder)

NOTE:
Fit each ring into the cylinder and push it to about 20 mm from the top edge of the cylinder. Push the ring into the cylinder with the piston so that it is perfectly perpendicular to the cylinder axis.

(a) 20 mm

3. Measure:
   - Ring end gap
     Out of specification → Replace.

NOTE:
It is impossible to measure the oil scraper end gap. If the oil scraper port appears too large, replace all three rings.

Piston ring end gap (fitted into cylinder):	
Upper ring	**0.30 ~ 0.45 mm** **<Limit>: 0.7 mm**
Lower ring	**0.30 ~ 0.45 mm** **<Limit>: 0.8 mm**
Oil scraper (tracks)	**0.20 ~ 0.70 mm**

PISTON PIN

1. Check:
   - Piston pin
     Blue colour/Grooves ➔ Replace and check lubrication system.

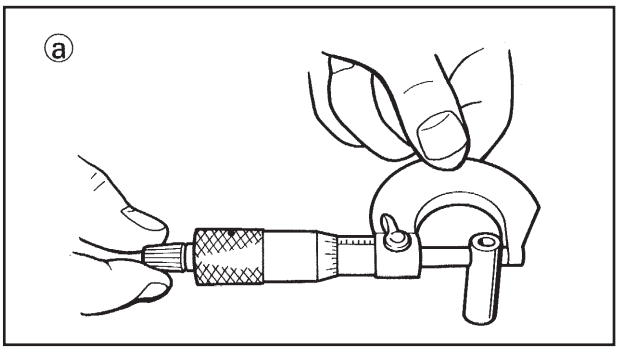

2. Measure:
   - External diameter (a) of pin
     Out of specification ➔ Replace.

External diameter (pin):
21.991 ~ 22.000 mm

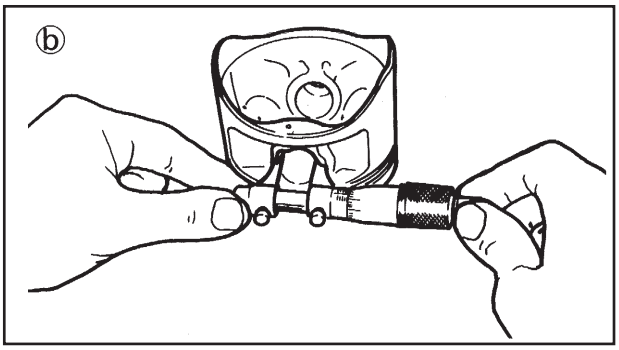

3. Measure:
   - Clearance between piston pin and pin seat
     Out of specification ➔ Replace.

Clearance between piston pin and piston =
Diameter of pin seat on piston (b) – Diameter of pin (a)

Clearance between piston pin and pin seat on piston:
0.004 ~ 0.024 mm
<Limit>: 0.07 mm

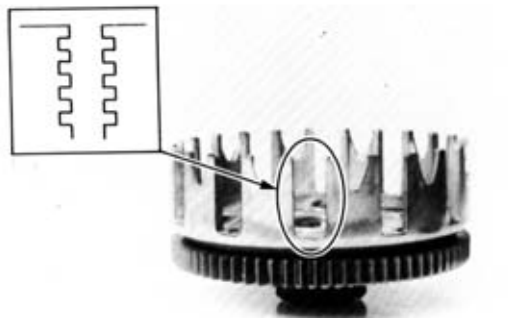

CLUTCH

1. Inspect:
   - Clutch gear assy teeth
     Cracks/Pitting (on edges):
     Moderate ➔ Burr.
     Accentuated ➔ Replace clutch gear assy.

NOTE:
Pitting of the gear assy teeth causes irregular functioning.

2. Inspect:
   - Clutch gear assy bearing
     Damaged → Replace.
3. Inspect:
   - Groove in clutch boss.
     Pitting:
     Moderate → Burr.
     Accentuated → Replace clutch boss.

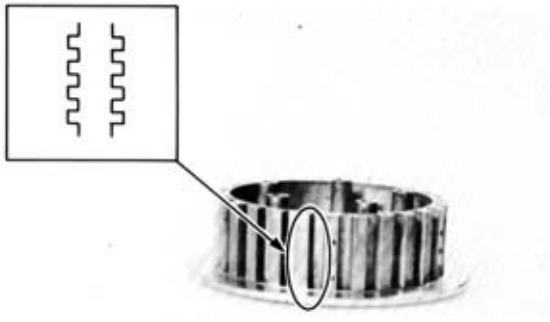

NOTE:
Pitting of the clutch boss grooves causes irregular functioning.

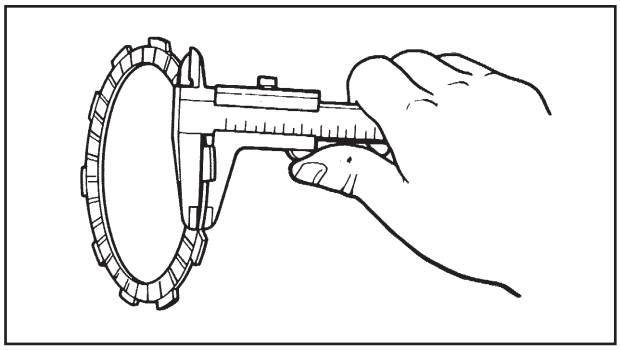

4. Measure:
   - Thickness of friction plates
     Out of specification → Replace all plates.

	Thickness	Wear limit
Type "A" (2 parts)	2.94 ~ 3.06 mm	2.8 mm
Type "B" (6 parts)	2.72 ~ 2.88 mm	2.6 mm

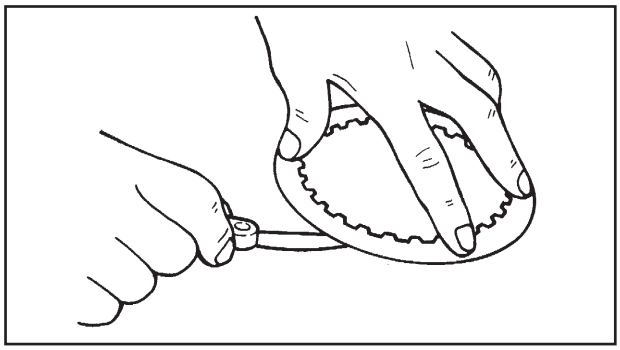

5. Measure:
   - Deformation of clutch plates
     Out of specification → Replace all plates.

Clutch plates deformation:
<Limit>: 0.2 mm

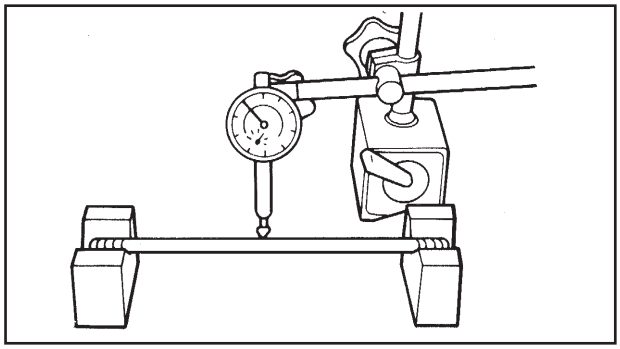

6. Measure:
   - Runout limit of clutch push rod.
     Turn clutch push rod on two V blocks.

Clutch push rod runout:
<Limit>: 0.2 mm

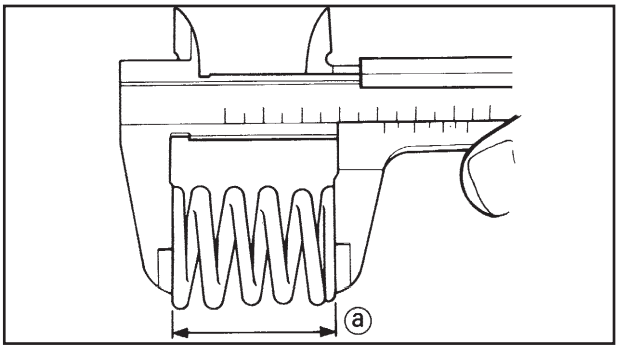

7. Measure:
   - Free length of clutch compression springs (a)
     Out of specification → Replace all springs.

Free length of clutch compression spring (a): **42.8 mm**	

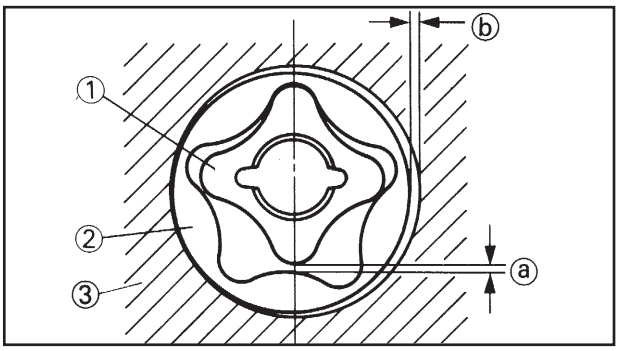

OIL PUMP

1. Measure:
   - Clearance between rotors (a)
     (Between the internal rotor (1) and the external rotor (2))
   - Side clearance (b)
     (Between the external rotor (2) and the pump stator (3))
     Out of specification → Replace oil pump.

Oil pump clearances:	
Clearance between rotors (a)	**0.12 mm <Limit>: 0.2 mm**
Side clearance (b)	**0.03 ~ 0.08 mm <Limit>: 0.15 mm**

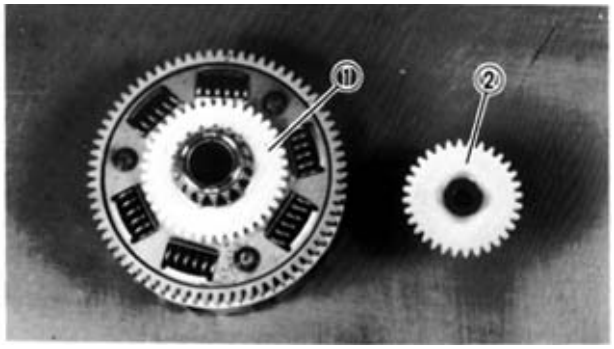

2. Inspect:
   - Oil pump drive gear (1)
   - Oil pump driven gear (2)
     Wear/Cracks/Damage → Replace.

PRIMARY TRANSMISSION

1. Inspect:
   - Primary drive gear teeth (1)
   - Primary driven gear teeth (2)
     Wear/Damage → Replace both gears.
     Excess noise during functioning → Replace both gears.

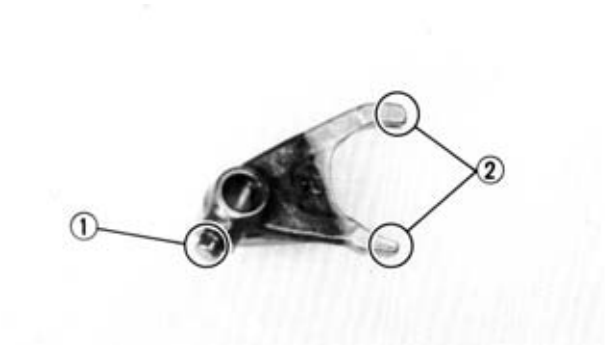

TRANSMISSION AND GEARBOX

1. Inspect:
   - Shift fork pin (1)
   - Shift fork pawl (2)
     Lines/Creases/Wear → Replace.

2. Inspect:
   - Shift cam groove
   - Shift cam pins
     Wear/Damage → Replace.

3. Check:
   - Shift fork movement
     Rough functioning → Replace shift forks and/or guide bars.

4. Inspect:
   - Guide bar
     Turn on a flat surface.
     Curvature → Replace.

⚠ WARNING

Do not attempt to straighten the deformed guide bar.

5. Measure:
   - Transmission shaft eccentricity.
     Use the centring tool and micrometer.
     Out of specification → Replace bent shaft.

Transmission shaft eccentricity:
<Limit>: 0.08 mm

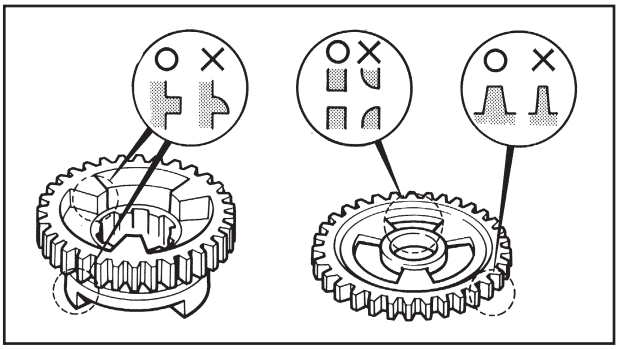

6. Inspect:
   - Gear teeth
     Brown colouring/Pitting/Wear → Replace.
   - Mating clutches
     Rounded edges/Cracks/Missing fragments → Replace.
7. Check:
   - Proper mating of each gear (with corresponding part)
   - Gear movement
     Roughness → Replace.

▼▼▼▼▼▼▼▼▼▼▼▼▼▼▼▼▼▼▼▼▼▼▼▼▼▼▼▼▼▼▼▼▼▼

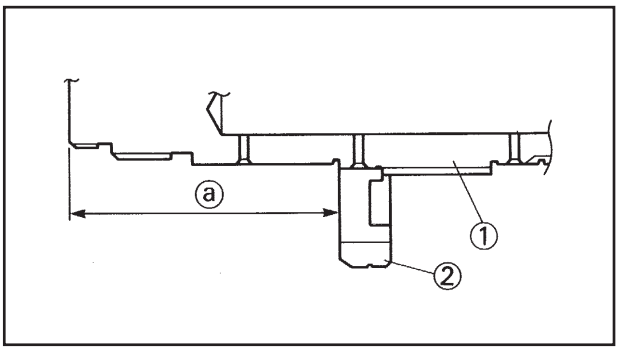

Transmission gear assembly steps:

- Fit the second gear (2) to the propeller shaft (1) as shown in the figure.

(a) 60.0 mm

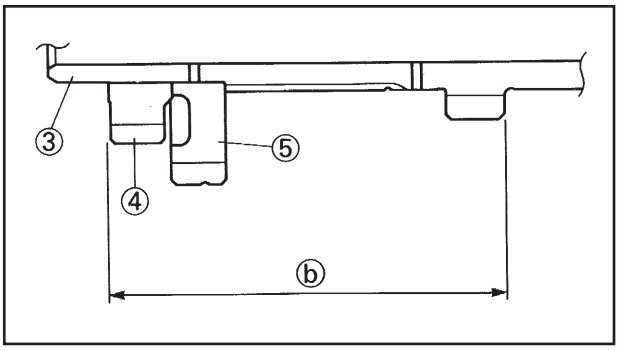

- Fit the second sprocket (4) and fifth sprocket (5) to the main shaft (3).

(b) 90.5 mm

▲▲▲▲▲▲▲▲▲▲▲▲▲▲▲▲▲▲▲▲▲▲▲▲▲▲▲▲▲▲▲▲▲▲

8. Inspect:
   - Circlip
     Damage/Loosening/Bending → Replace.

SHAFT AND STOPPER LEVER

1. Inspect:
   - Shift shaft
     Bent/Wear/Damage → Replace.

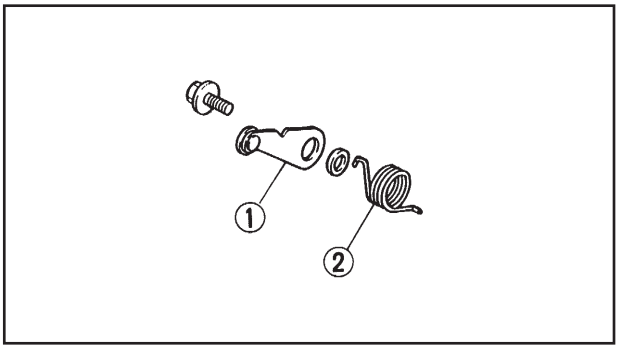

2. Inspect:
   - Stopper lever (1)
     The roller rotates jerkily → Replace.
     Bent/Damage → Replace.
3. Inspect:
   - Return spring (2)
     Damage/Cracks → Replace.

STARTER TRANSMISSION

1. Check:
   - Starter clutch functioning (1).
     Turn the clutch in the direction indicated by the arrow.
     Irregular functioning/Damage → Replace the clutch.

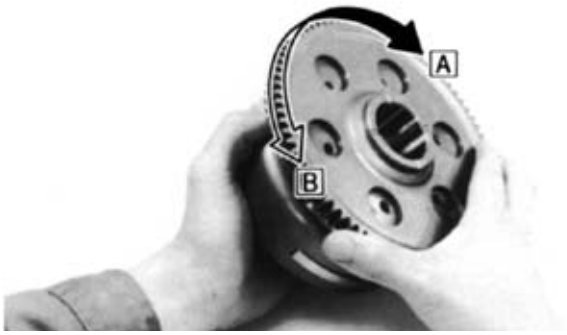

▼▼▼▼▼▼▼▼▼▼▼▼▼▼▼▼▼▼▼▼▼▼▼▼▼▼▼▼▼▼▼▼

- Install the starter rim on the gear and hold the gear firm.
- When turning the gear rim in a clockwise direction (A), the gear and rim must be meshed. Otherwise, the gear is faulty and must be replaced.
- When the gear rim is turned in a anti-clockwise direction (B), it must turn freely. Otherwise, the gear is faulty and must be replaced.

▲▲▲▲▲▲▲▲▲▲▲▲▲▲▲▲▲▲▲▲▲▲▲▲▲▲▲▲▲▲▲▲

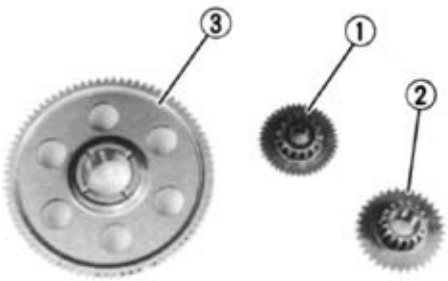

2. Inspect:
   - Starter neutral gear teeth (1)
   - Starter neutral gear teeth (2)
   - Starter rim teeth (3)
     Burrs/Shavings/Roughness/Wear → Replace.

3. Inspect:
   - Starter rim (contact surfaces)
     Pitting/Wear/Damage → Replace.

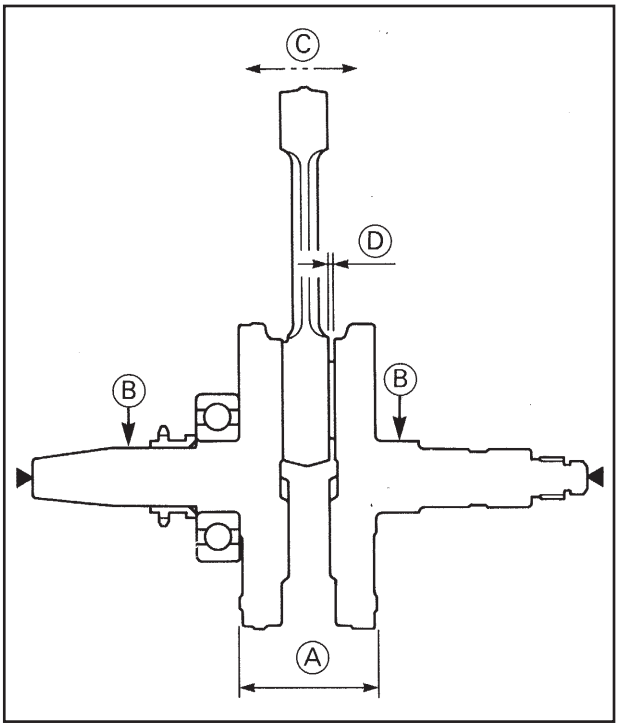

CRANKSHAFT

1. Measure:
   - Width of crank (A)
     Out of specification → Replace crankshaft.

Width of crank:
74.95 ~ 75.00 mm

   - Runout (B)
     Out of specification → Replace crankshaft and/or crank bearing.

Crankshaft runout:
<Limit>: 0.03 mm

   - Connecting rod small end clearance (C)
     Out of specification → Replace connecting rod big end bearing, connecting rod pin and/or connecting rod.

Connecting rod small end clearance:
0.8 mm

   - Side clearance (D)
     Out of specification → Replace connecting rod.

Connecting rod big end clearance:
0.35 ~ 0.65 mm

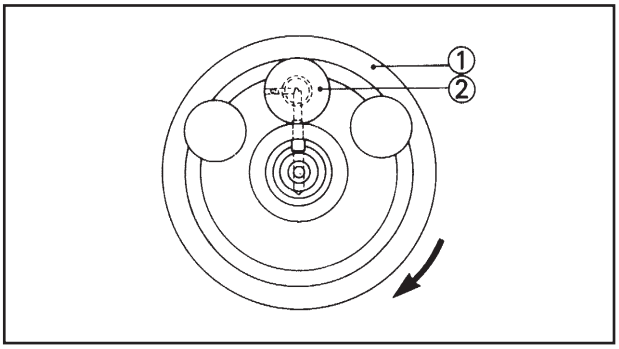

Crankshaft assembly procedure:
The passages of crankshaft (1) oil and connecting rod pin (2) oil must coincide with a tolerance of less than 1.0 mm.

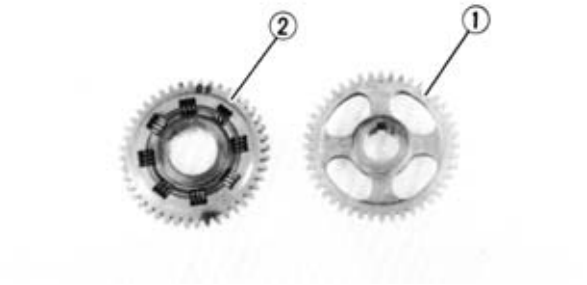

BALANCER SHAFT DRIVE AND DRIVEN GEARS

1. Inspect:
   - Drive gear teeth (1)
   - Driven gear teeth (2)
     Wear/damage → Replace both gears.

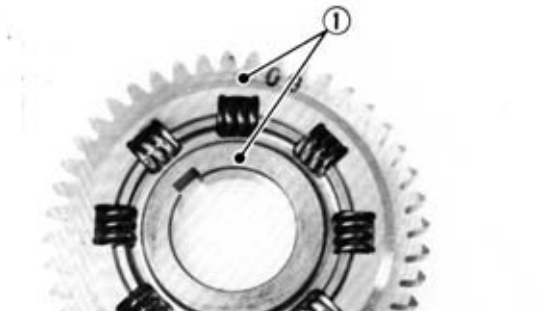

2. Check:
   - Marks (1)
     If they are not aligned → Align the marks as shown in the figure.

CRANKCASE

1. Inspect:
   - Crankcase
   - Bearing housing
     Damaged → Replace.

BEARING AND OIL SEAL

1. Inspect:
   - Bearing
     Roughness/Pitting/Damage → Replace.
   - Oil seal edge
     Damage/Wear → Replace.

ENGINE ASSEMBLY AND SETTING

VALVES AND ROCKER ARMS

(1) Rocker arm n. 2
(2) Wave washer
(3) Rocker shaft (intake)
(4) Rocker arm n. 1
(5) Valve cotters
(6) Upper valve spring retainer
(7) Oil seal
(8) Inner valve spring
(9) Outer valve spring
(10) Valve (intake)
(11) Lower valve spring retainer
(12) Rocker shaft (exhaust)
(13) Rocker arm n. 4
(14) Rocker arm n. 3
(15) Rocker shaft (exhaust)
(16) Valve (exhaust)

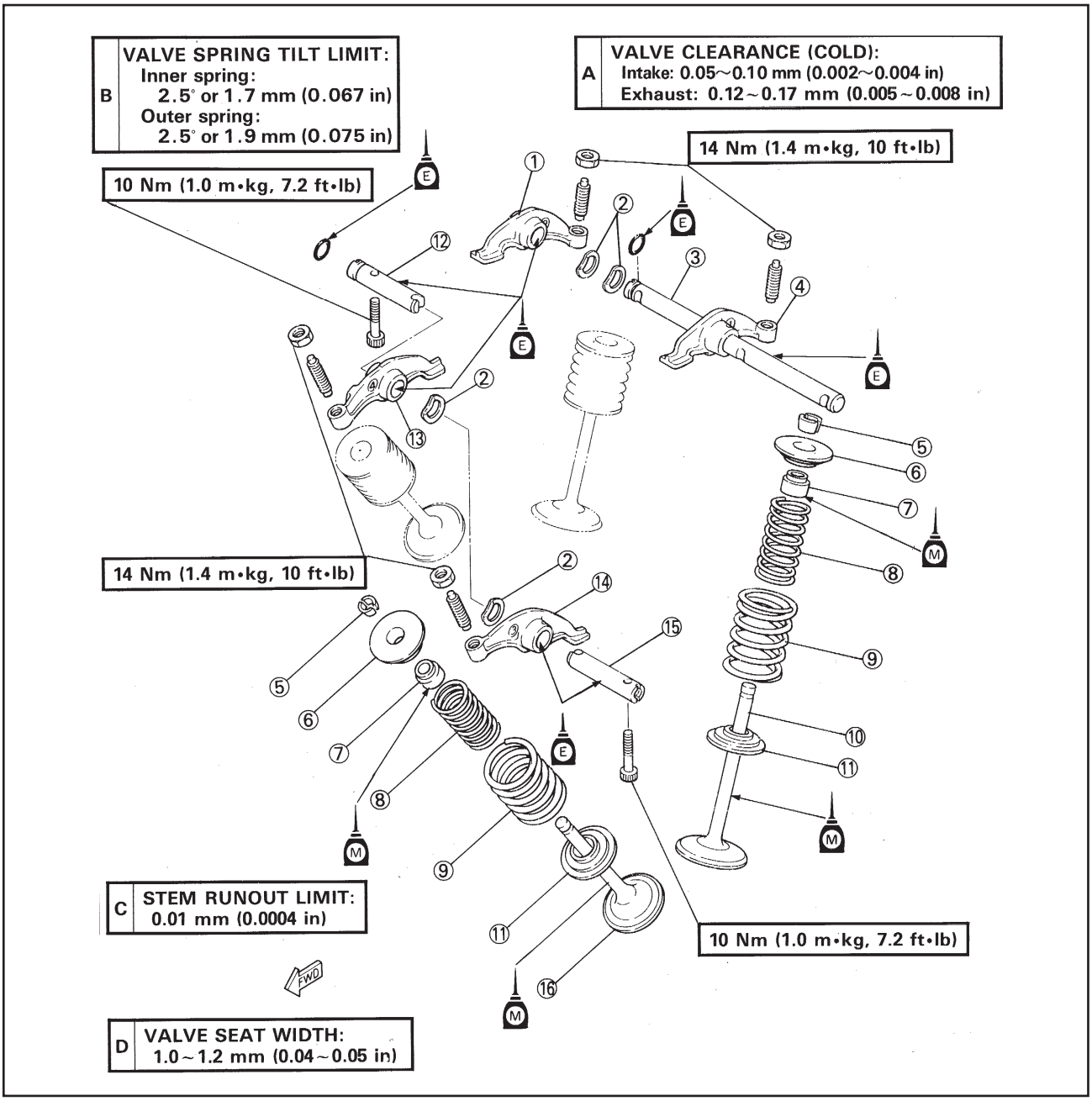

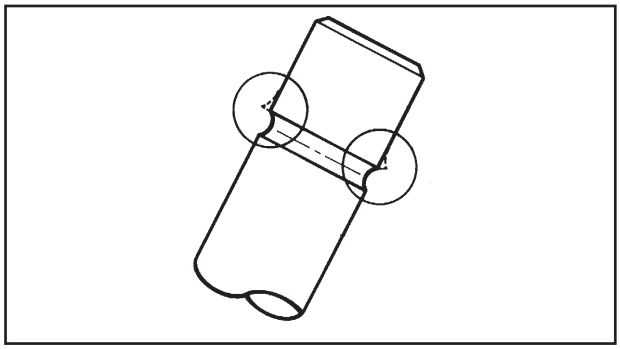

VALVES

1. Burrs:
   - Valve stem tip
     (leave the valve stem tip with an oil stone).

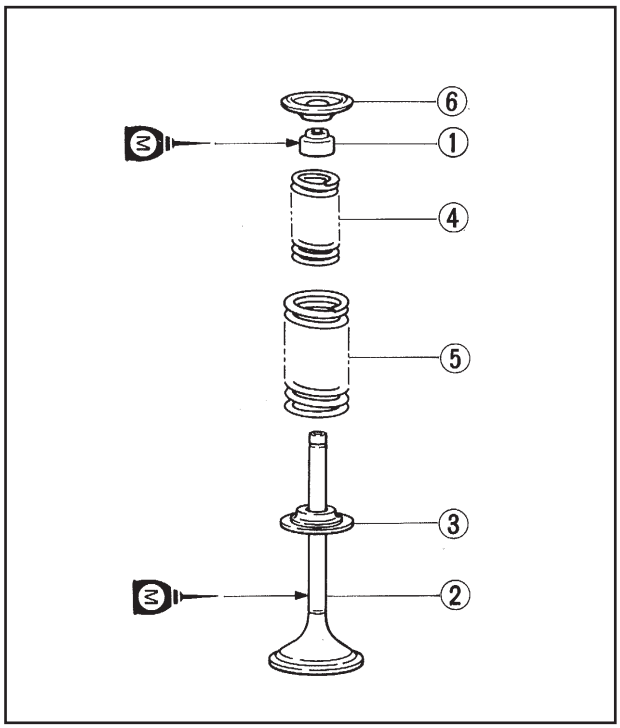

2. Lubricate:
   - Valve stem and oil seal (apply high quality molybdenum disulfide oil)
3. Install:
   - Oil seal (1)
   - Valves (2)
   - Lower valve spring retainer (3)
   - Inner valve spring (4)
   - Outer valve spring (5)
   - Upper valve spring retainer (6)

NOTE:
Install the innner and outer springs with the widest thread upwards.

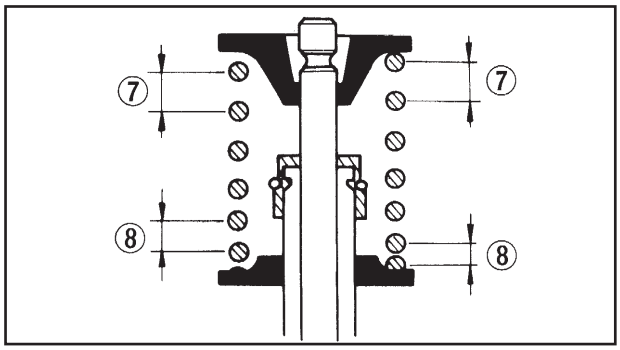

(7) Higher pitch
(8) Lower pitch

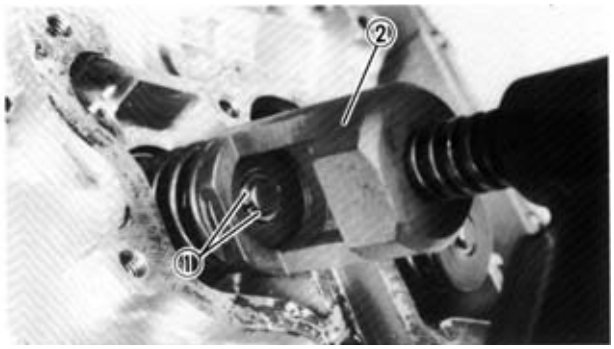

4. Install:
   - Valve cotters (1)

NOTE:
Compress the valve spring with the specific tool (2) to fit the cotters.

	Valve spring compressor: **P/N. 90890-04019**

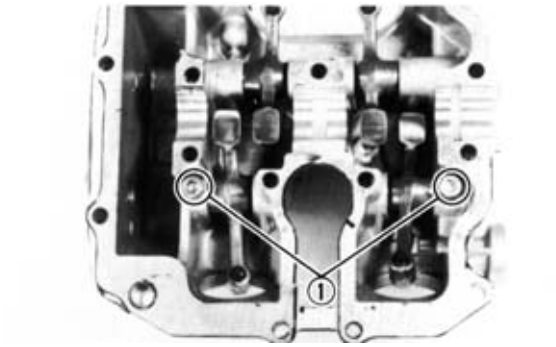

ROCKER ARMS

1. Lubricate:
   - Rocker shaft (apply engine oil)
2. Install:
   - Rocker arm
   - Rocker shaft

	Screws (1) (rocker shaft): 10 Nm (1.0 kgm)

NOTE:
Each rocker arm is numbered.

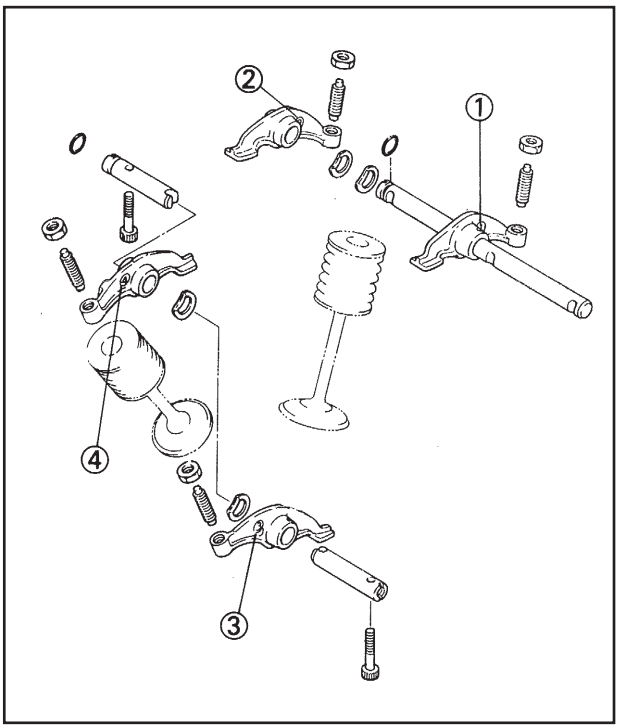

(1) # 1
(2) # 2
(3) # 3
(4) # 4

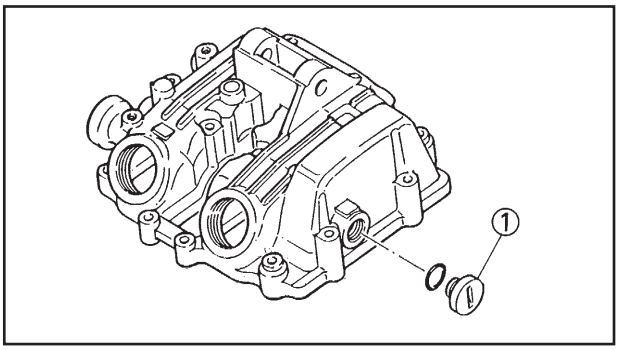

3. Install:
   - Cap (1)

CRANKSHAFT AND BALANCER SHAFT

(1) Connecting rod pin
(2) Crank (left)
(3) Connecting rod
(4) Bearing
(5) Bearing
(6) Bearing
(7) Balancer shaft
(8) Bearing

A	CRANK WIDTH: 74.95 ~ 75.00 mm (2.950 ~ 2.953 in)
B	RUNOUT LIMIT: 0.03 mm (0.0012 in)
C	SMALL END FREE PLAY: 0.8 mm (0.031 in)
D	BIG END SIDE CLEARANCE: 0.35~0.65 mm (0.013~0.026 in) 0.35~0.75 mm (0.013~0.030in)(A)

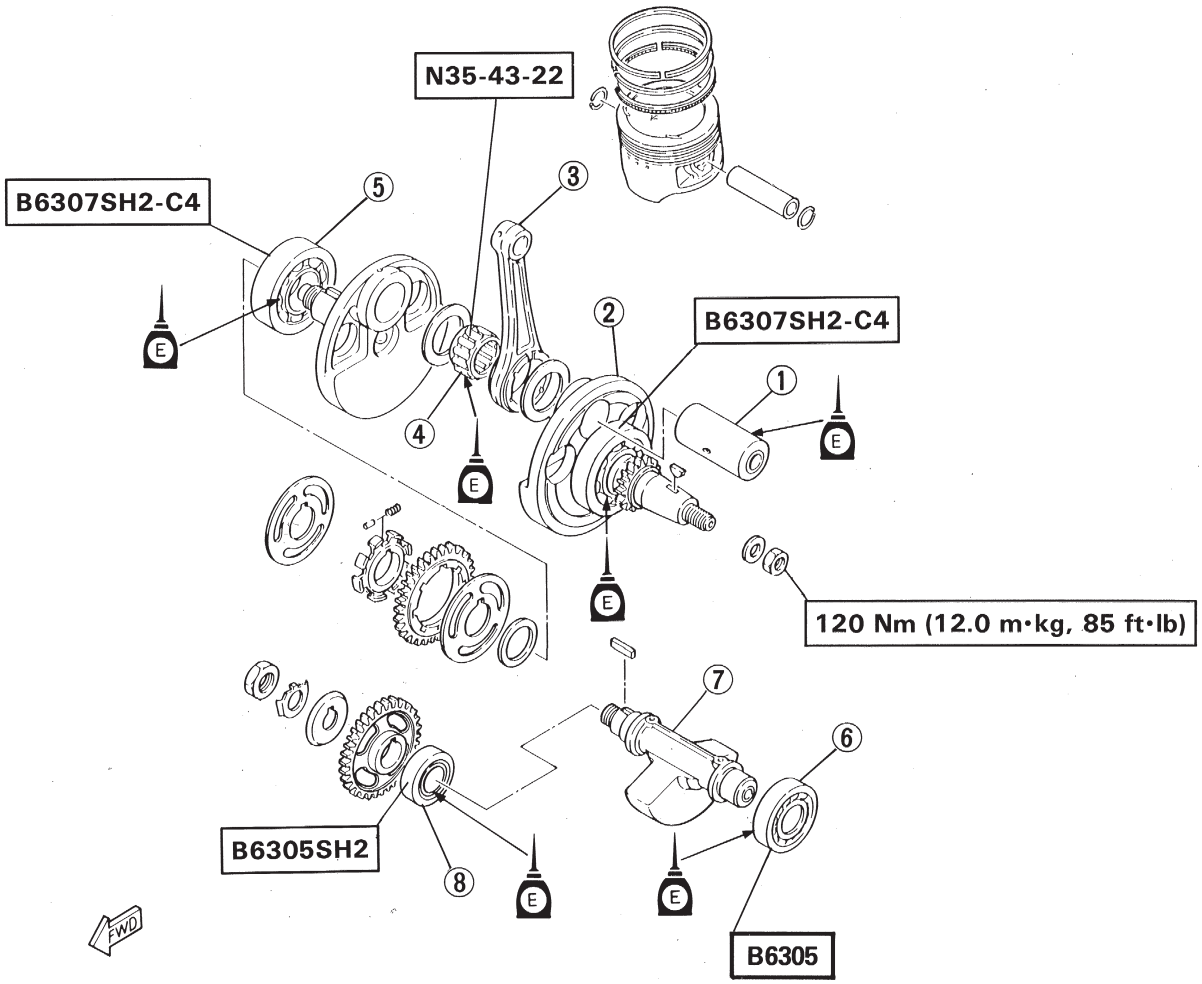

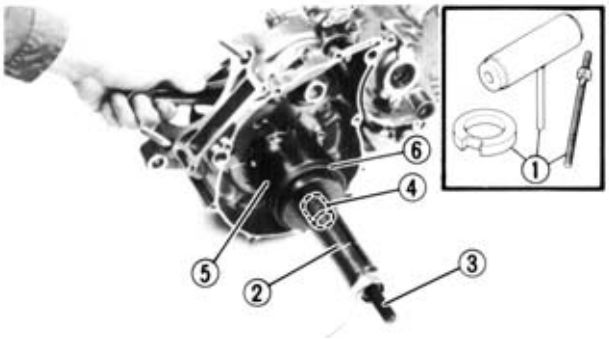

CRANKSHAFT AND BALANCER SHAFT

1. Install:
   - Crankshaft

Crankshaft installation tool (1):
P/N. Y U-90050
Crankshaft installation tool spacer (2):
P/N. 90890-01274
Crankshaft installation tool bolt (3):
P/N. 90890-01275
Adapter # 10 (MI 4) (4):
P/N. Y M-90069
P/N. 90890-04059
Crank spacer (5):
P/N. YM-91044
P/N. 90890-04081
Spacer (6):
P/N. 90890-01016

NOTE:

Hold the connecting rod at top dead centre with one hand and turn the assembly tool nut with the other.
Work on the assembly tool until the lower part of the crankshaft enters into contact with the bearings.

CAUTION:

To protect the crankshaft from scratches and facilitate assembly operations, apply grease to the edges of the oil seals and engine oil to the bearings.

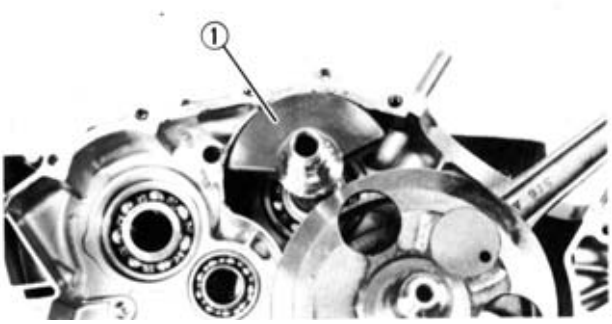

2. Install:
   - Balancer shaft (1)

TRANSMISSION

(1) Sprocket
(2) Oil seal
(3) Bearing
(4) Second wheel gear
(5) Secondary shaft
(6) Fifth wheel gear
(7) Third wheel gear
(8) Fourth wheel gear
(9) First wheel gear
(10) Bearing
(11) Bearing
(12) Second sprocket gear
(13) Fifth sprocket gear
(14) Third sprocket gear
(15) Fourth sprocket gear
(16) Main shaft
(17) Bearing

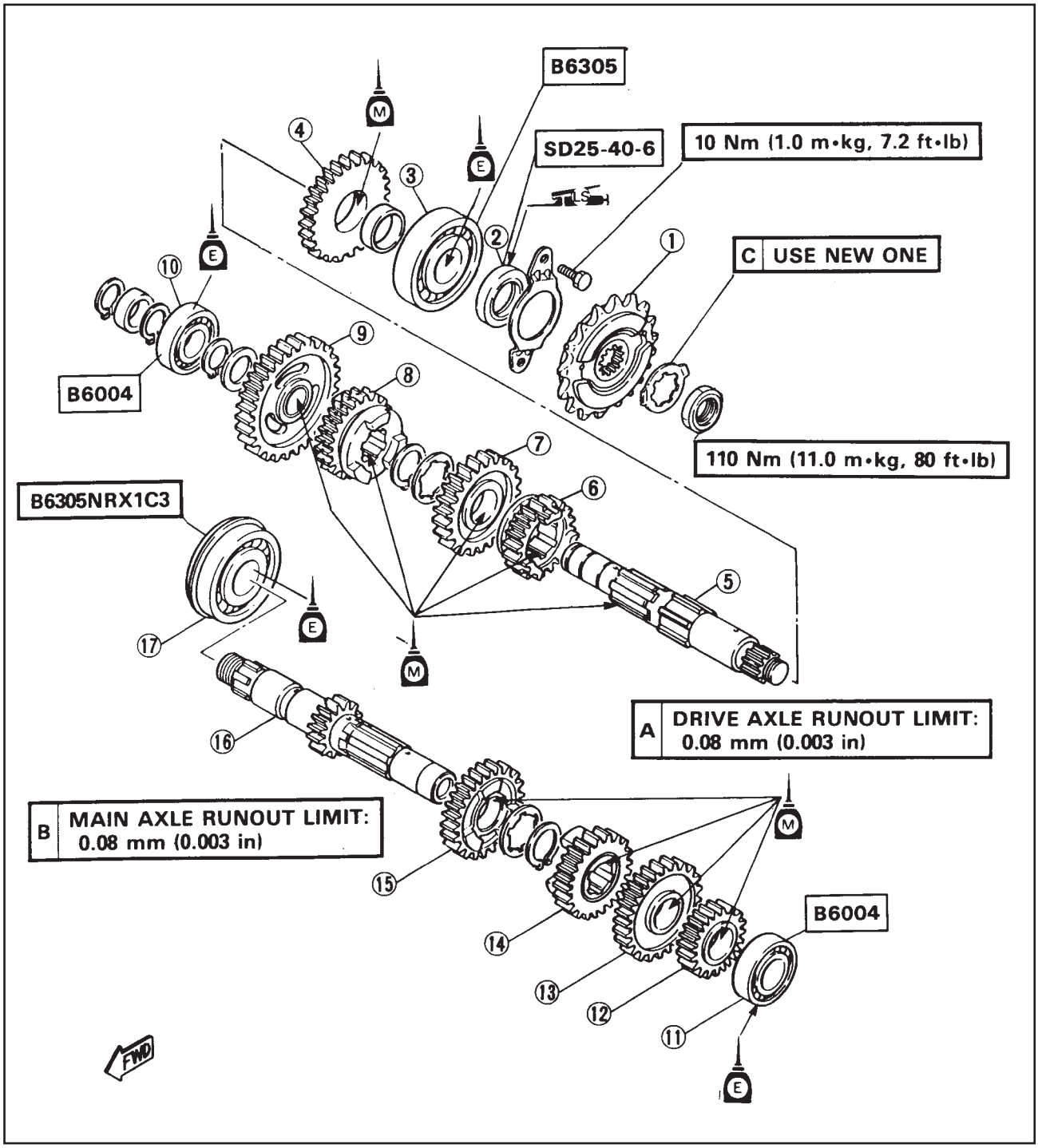

GEARBOX

(1) Stopper lever
(2) Guide bar
(3) Shift fork #3
(4) Shift fork #1
(5) Shift cam
(6) Guide bar
(7) Shift fork #2
(8) Shift shaft #1
(9) Shift shaft #2
(10) Oil seal
(11) Shift lever

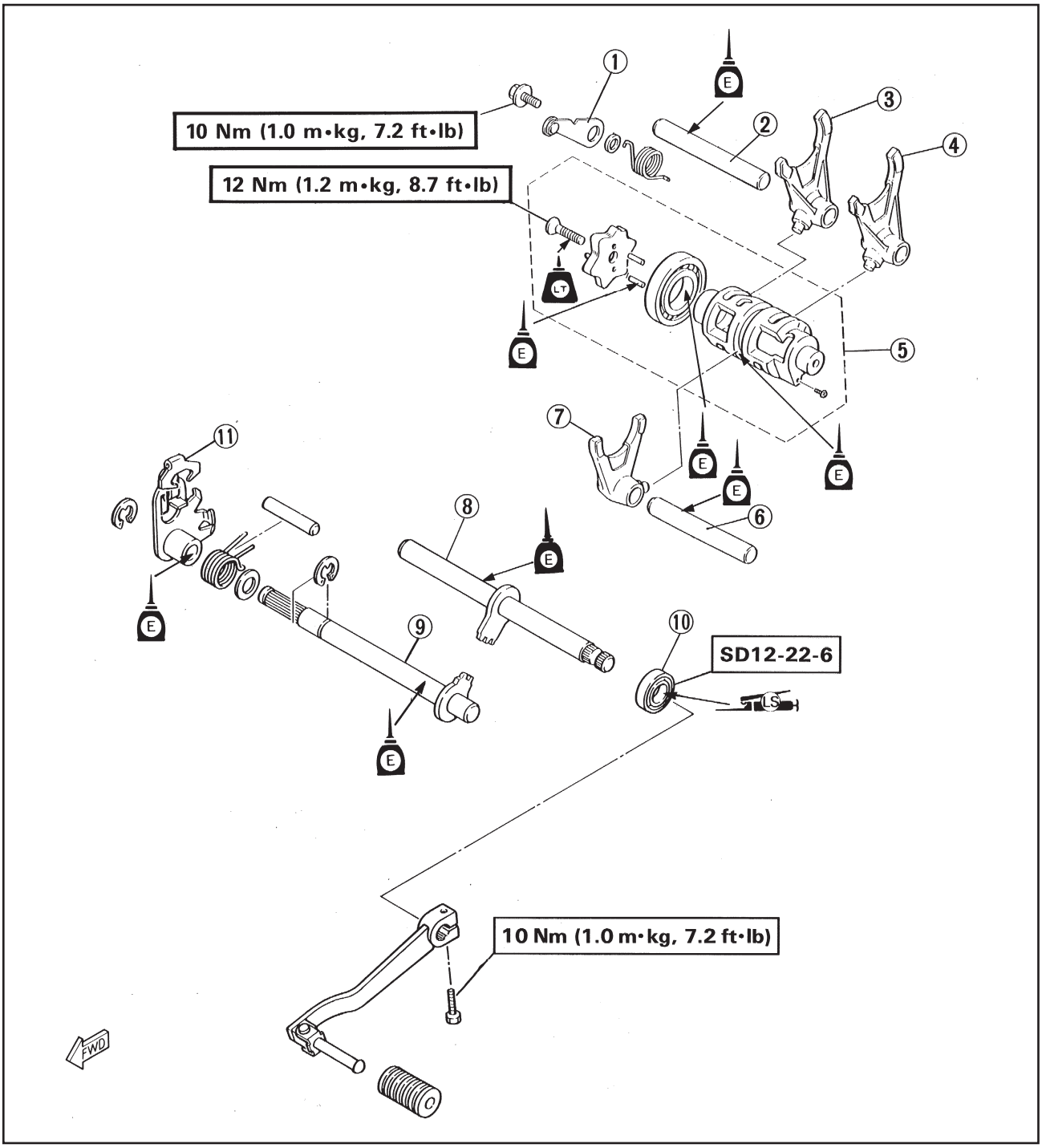

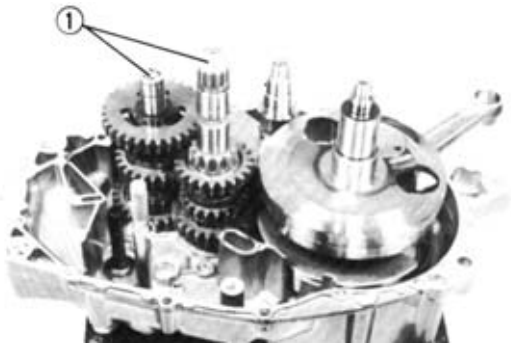

TRANSMISSION AND GEARBOX

1. Install:
   - Transmission assembly (1)

2. Install:
   - Shift fork #1 (1)
   - Shift fork #2 (2)
   - Shift fork #3 (3)
   - Shift cam (4)
   - Guide bar (5)

NOTE:
Each shift fork is identified by the number stamped on its side. All numbers must face left.

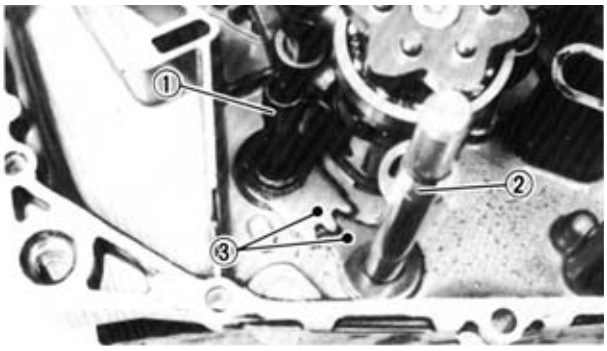

3. Install:
   - Shift shaft #1 (1)
   - Shift shaft #2 (2)

NOTE:
Align mark (3) on the shift lever shaft with that on the shift shaft.

4. Check:
   - Transmission functioning
     Jerky functioning → Repair.

ENGINE OIL PUMP AND OIL STRAINER

(1) Oil strainer
(2) Oil pump
(3) Oil pump gear

A	OIL PUMP: TIP CLEARANCE: 0.12 mm (0.005 in) SIDE CLEARANCE: 0.03～0.08 mm (0.001～0.003 in)

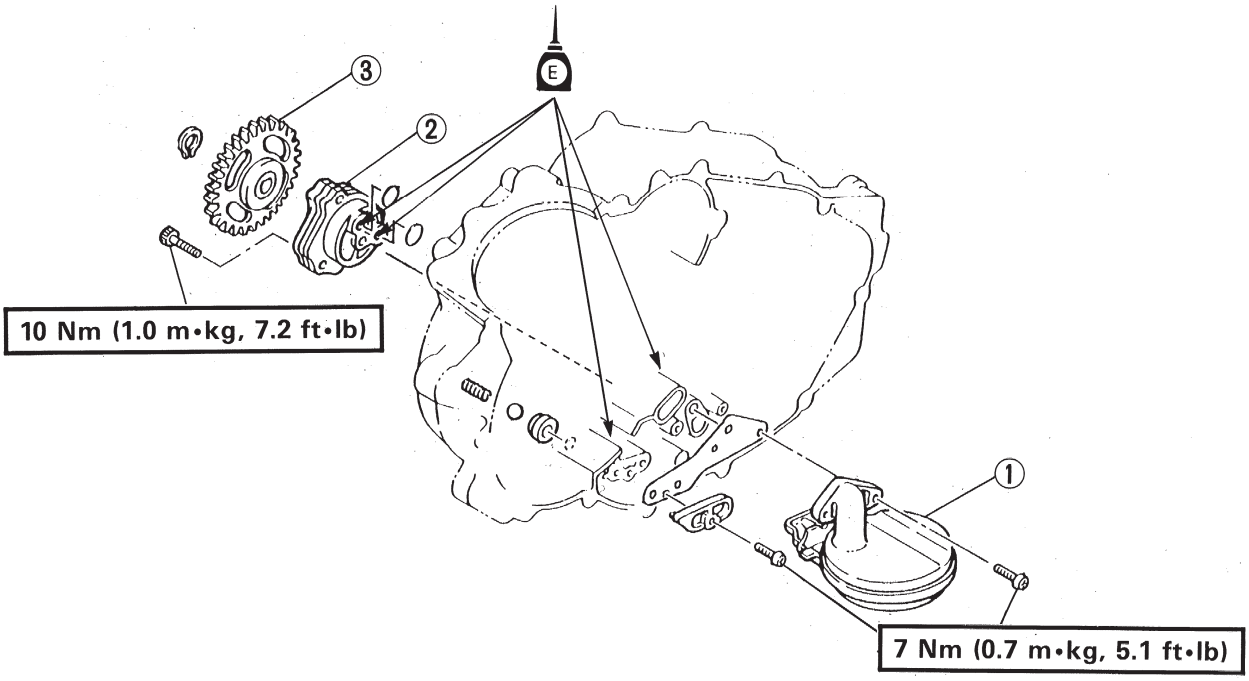

CRANKCASE

(1) Crankcase (R)
(2) Crankcase (L)
(3) Crankcase ventilation hose
(4) Dowel pin
(5) Dowel pin
(6) Dowel pin
(7) Bearing cover plate
(8) Collar
(9) Lock plate

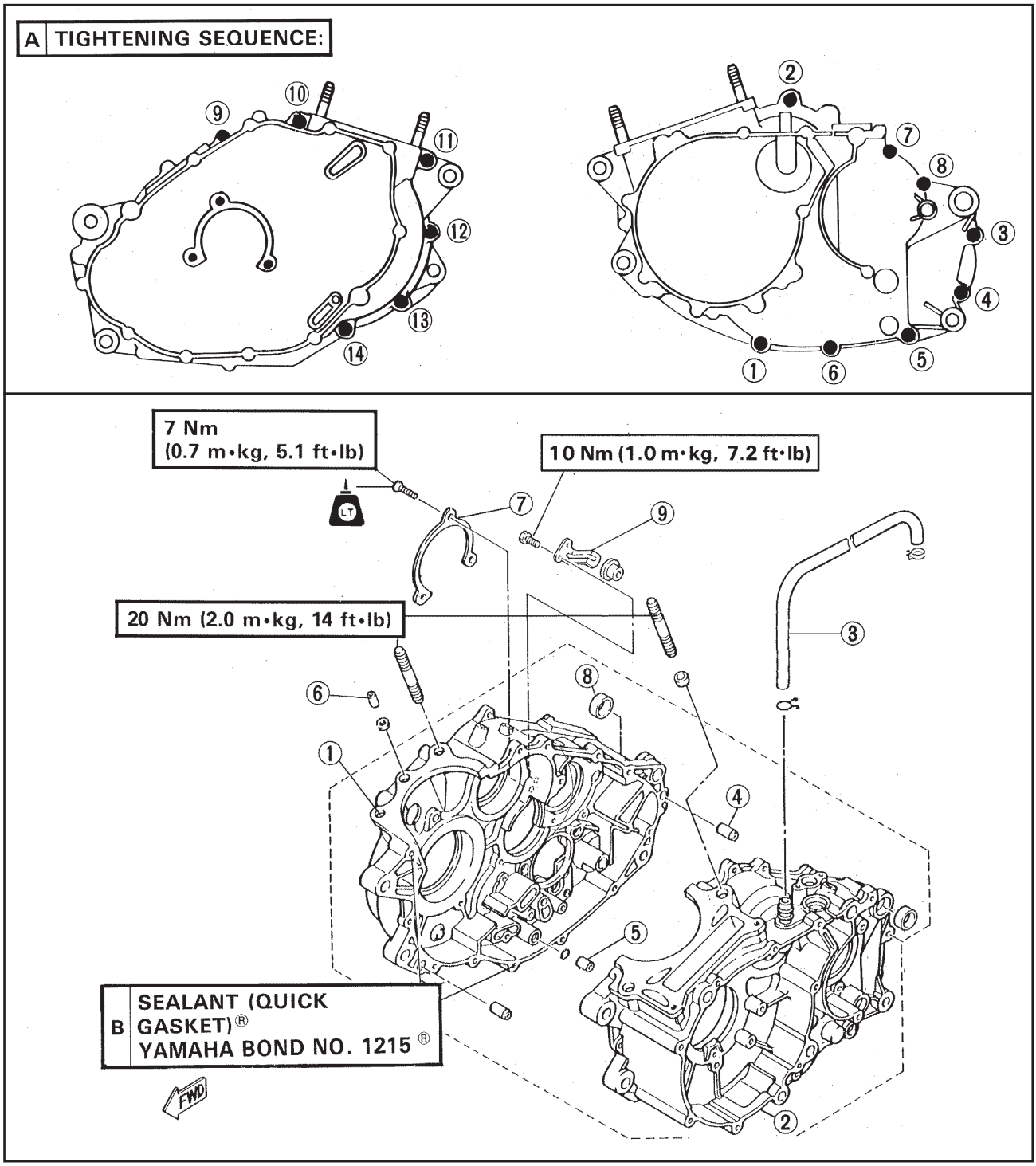

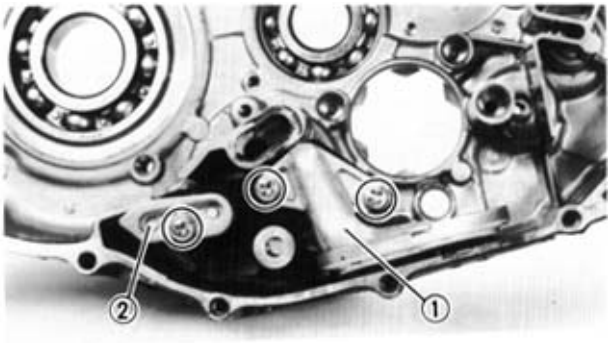

ENGINE OIL STRAINER

1. Install:
   - Oil strainer (1)
   - Oil passage cover (2)

	Screw (oil strainer): **7 Nm (0.7 mkg)** **Screw (oil passage cover):** **7 Nm (0.7 mkg)**

WARNING

Always use a new gasket.

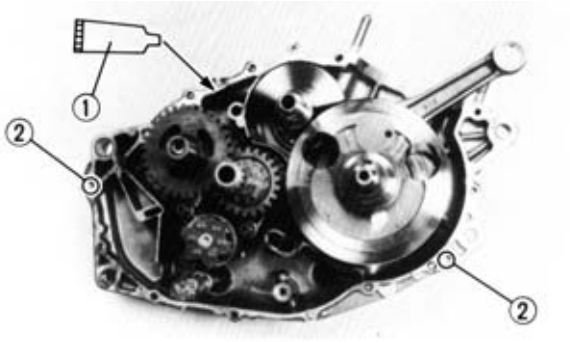

CRANKCASE

1. Apply:
   - Yamaha bond N° 1215® (1)
     (on the crankcase mating surfaces)

	Yamaha bond N° 1215®: **P/N. 90890-85505**

2 Install:
   - Dowel pin (2)
3. Assemble the left crankcase to the right. Beat gently with a soft hammer.

NOTE:

Turn the shift cam as shown in the figure so that it does not interfere with the crankcase during assembly.

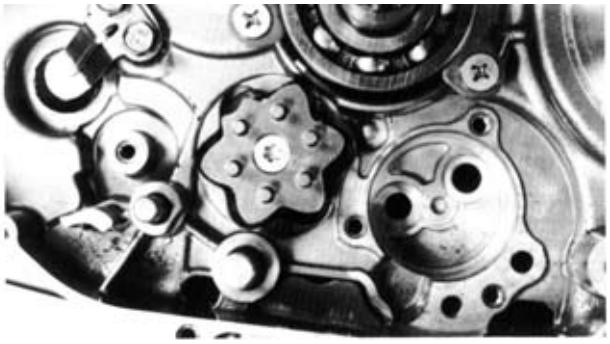

CAUTION:

Before installing and tightening the fastening screws, be sure that the transmission is working properly by hand, turning the shift cam in both directions.

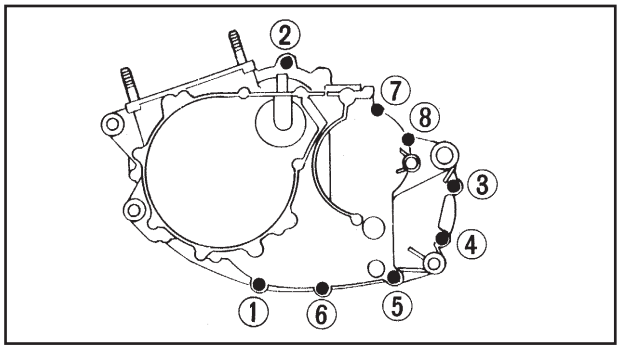

4. Tighten:
   - Screws (crankcase) (1) ~ (14)

NOTE:
Tighten the screws beginning with the one with the lowest number.

	Screw (crankcase): **10 Nm (1.0 mkg)**

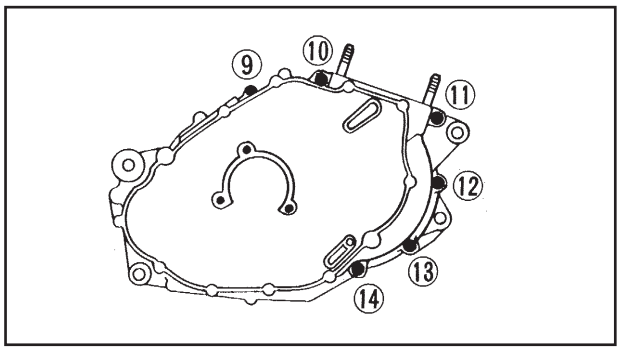

5. Apply:
   - 4-stroke engine oil
     (to the connecting rod pin, the bearing and the oil passage).

6. Check:
   - Gearbox and transmission functioning
     Jerky functioning → Replace.

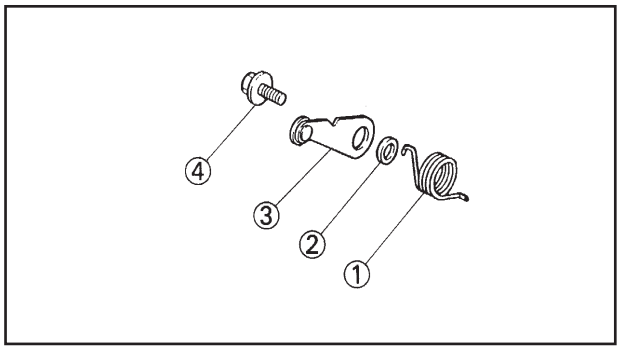

SHIFT SHAFT AND OIL PUMP

1. Install
   - Spring (1)
   - Collar (2)
   - Stopper lever (3)

	Stopper lever screw (4): **10 Nm (1.0 mkg)**

NOTE:
Place the stopper lever and the spring in the correct position.

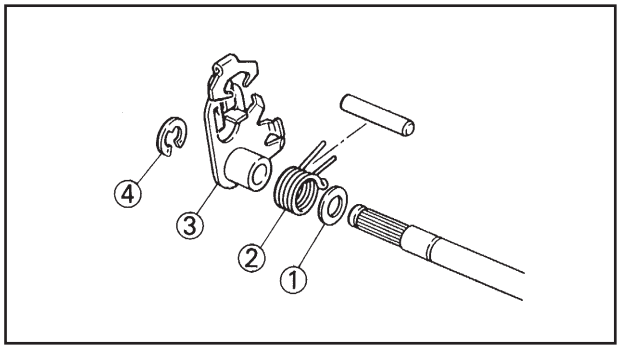

2. Install:
   - Plate washer (1)
   - Spring (2)
   - Shift lever (3)
   - Circlip (4)

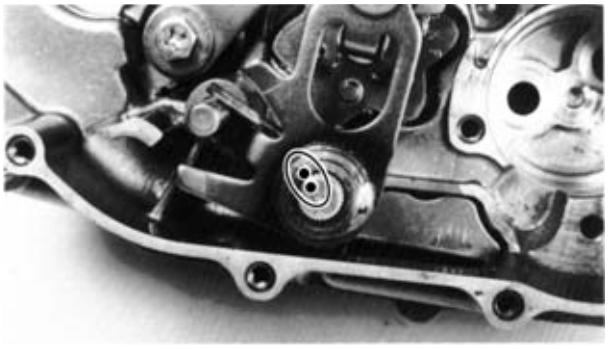

NOTE:
When installing the shift lever, align the mark on the lever with that on the shift shaft.

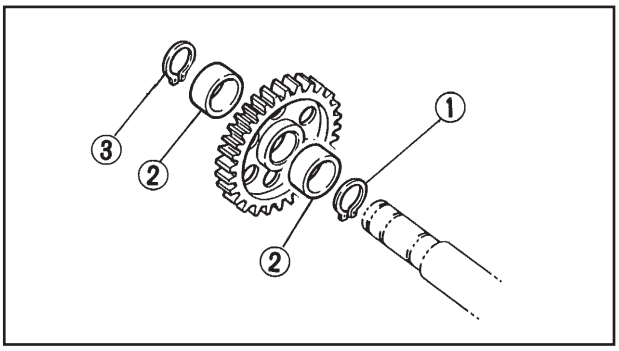

3. Install:
   - Circlip (1) (to the driving axle)
   - Spacer (2)
   - Circlip (3)

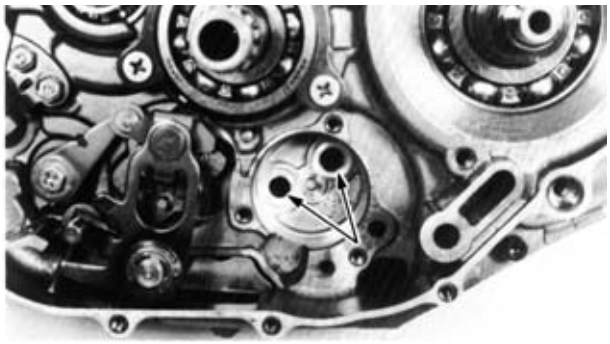

4. Apply:
   - 4-stroke engine oil
     (oil pipes in crankcase)

CAUTION:
To avoid damage to the engine, lubricate the oil pump pipes in the crankcase liberally with 4-stroke engine oil.

5. Apply:
   - 4-stroke engine oil
     (oil pump pipes)

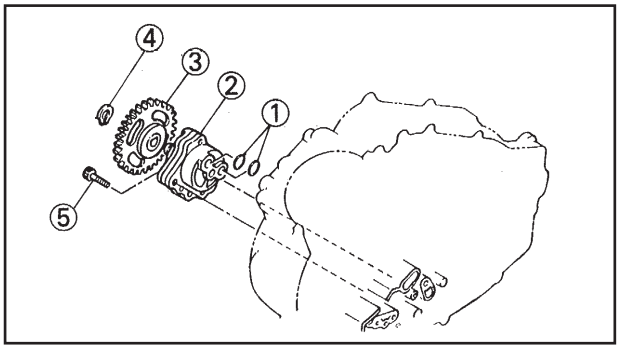

6. Apply:
   - O-Ring (1)
   - Oil pump (2)
   - Oil pump gear (3)
   - Circlip (4)

	Screw (5) (oil pump): **10 Nm (1.0 mkg)**

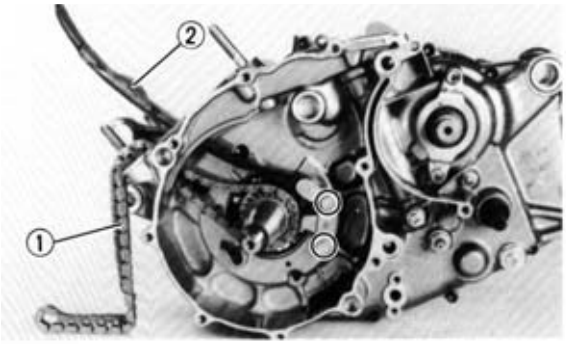

TIMING CHAIN

1. Install:
   - Timing chain (1)
   - Chain guide (2)

PISTON AND RINGS

(1) Ring (upper)
(2) Ring (lower)
(3) Scraper
(4) Piston
(5) Piston pin
(6) Circlip

PISTON SIZE:
94.915 ~ 94.965 mm
PISTON RING END GAP:
TOP: 0.30 ~ 0.45 mm
2ND: 0.30 ~ 0.45 mm
OIL: 0.20 ~ 0.70 mm
PISTON RING SIDE CLEARANCE:
TOP: 0.04 ~ 0.08 mm
2ND: 0.03 ~ 0.07 mm

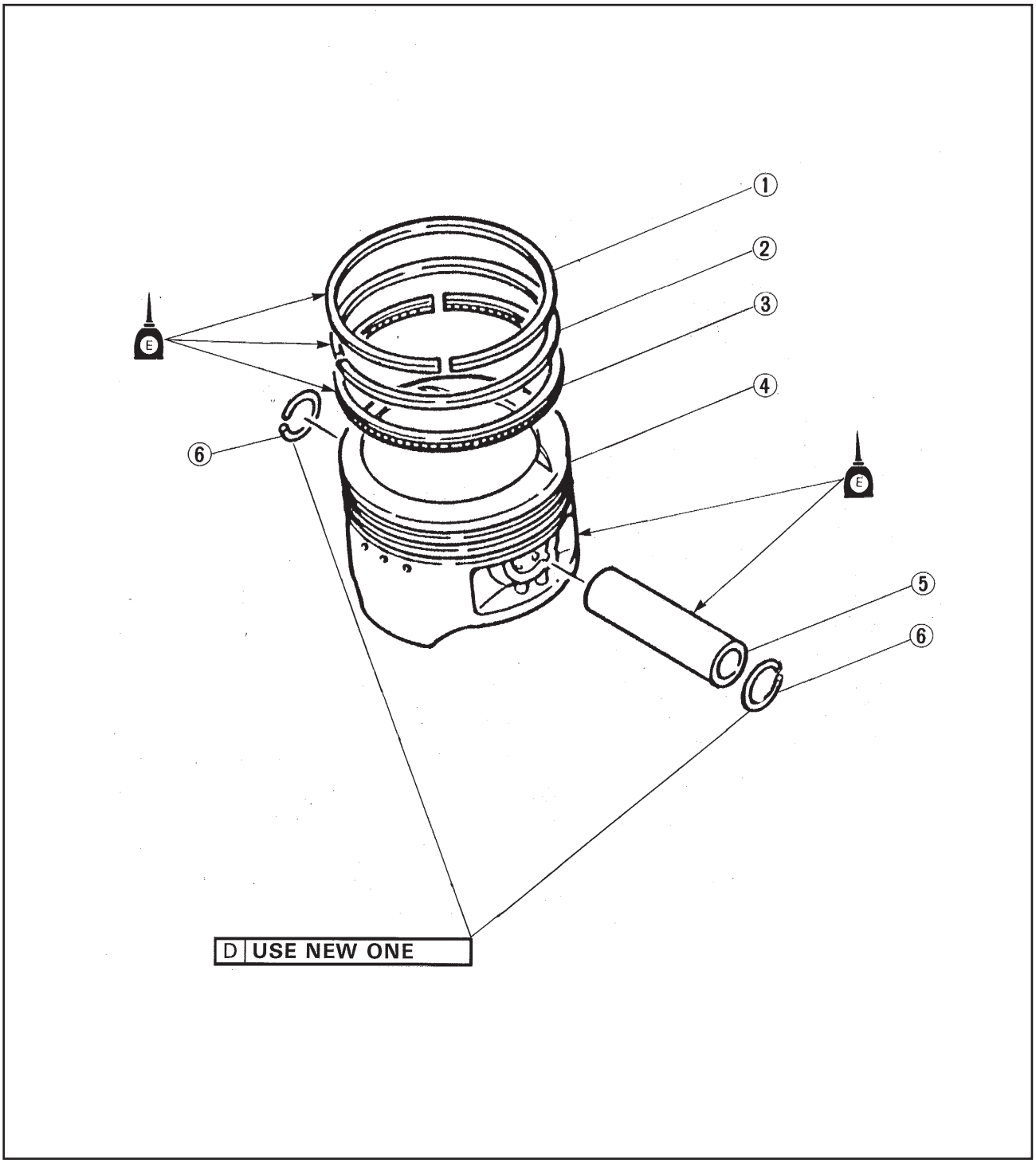

CYLINDER

(1) Gasket
(2) Cylinder
(3) O-Ring
(4) Gasket
(5) Dowel pin
(6) Dowel pin

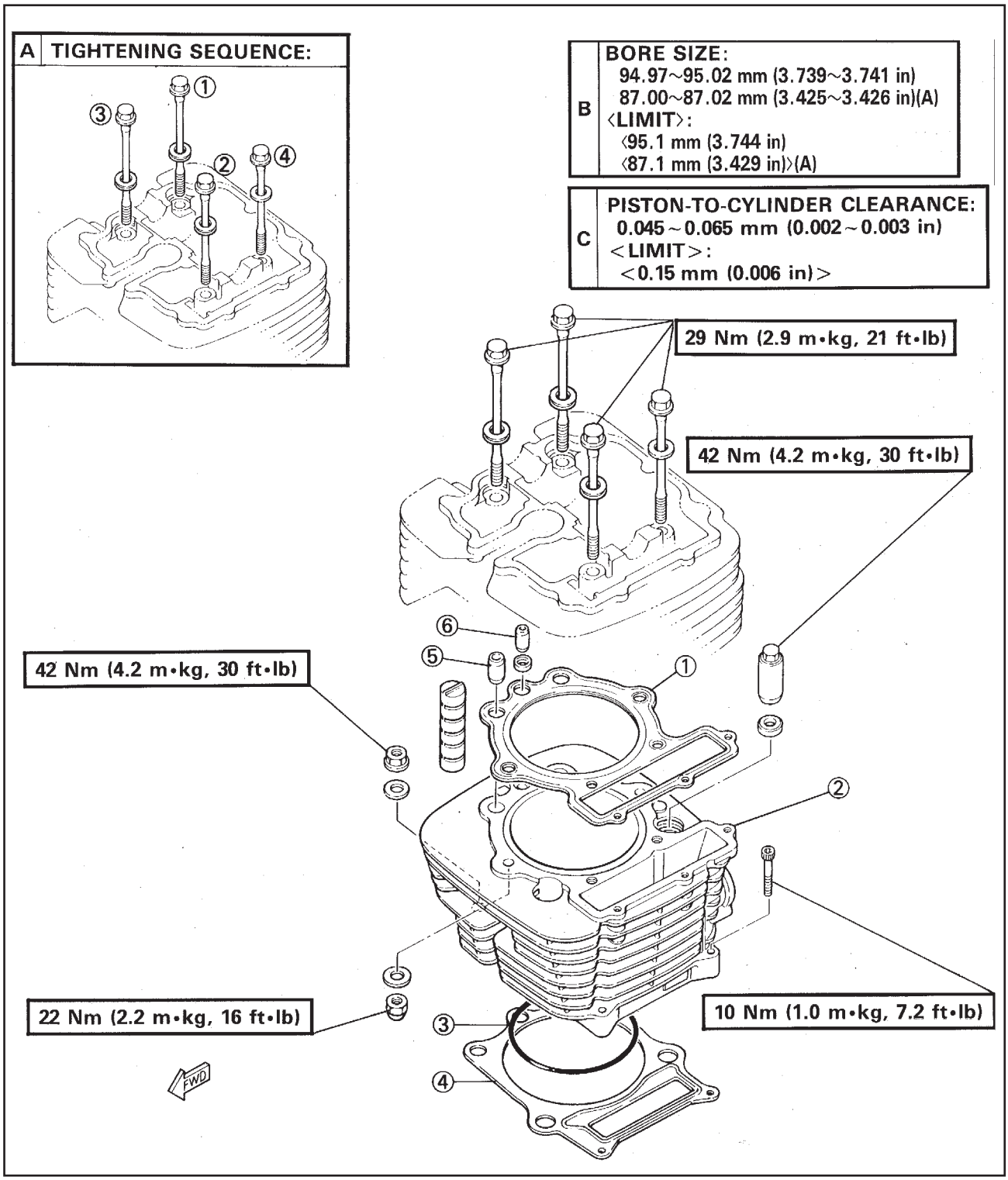

CYLINDER HEAD

(1) Cylinder head cover
(2) O-Ring
(3) Tappet cover (intake)
(4) Tappet covers (exhaust)
(5) O-Ring
(6) Cap
(7) Cylinder head
(8) Valve guide (intake valve)
(9) Valve guide (exhaust valve)
(10) Spark plug
(11) Dowel pin

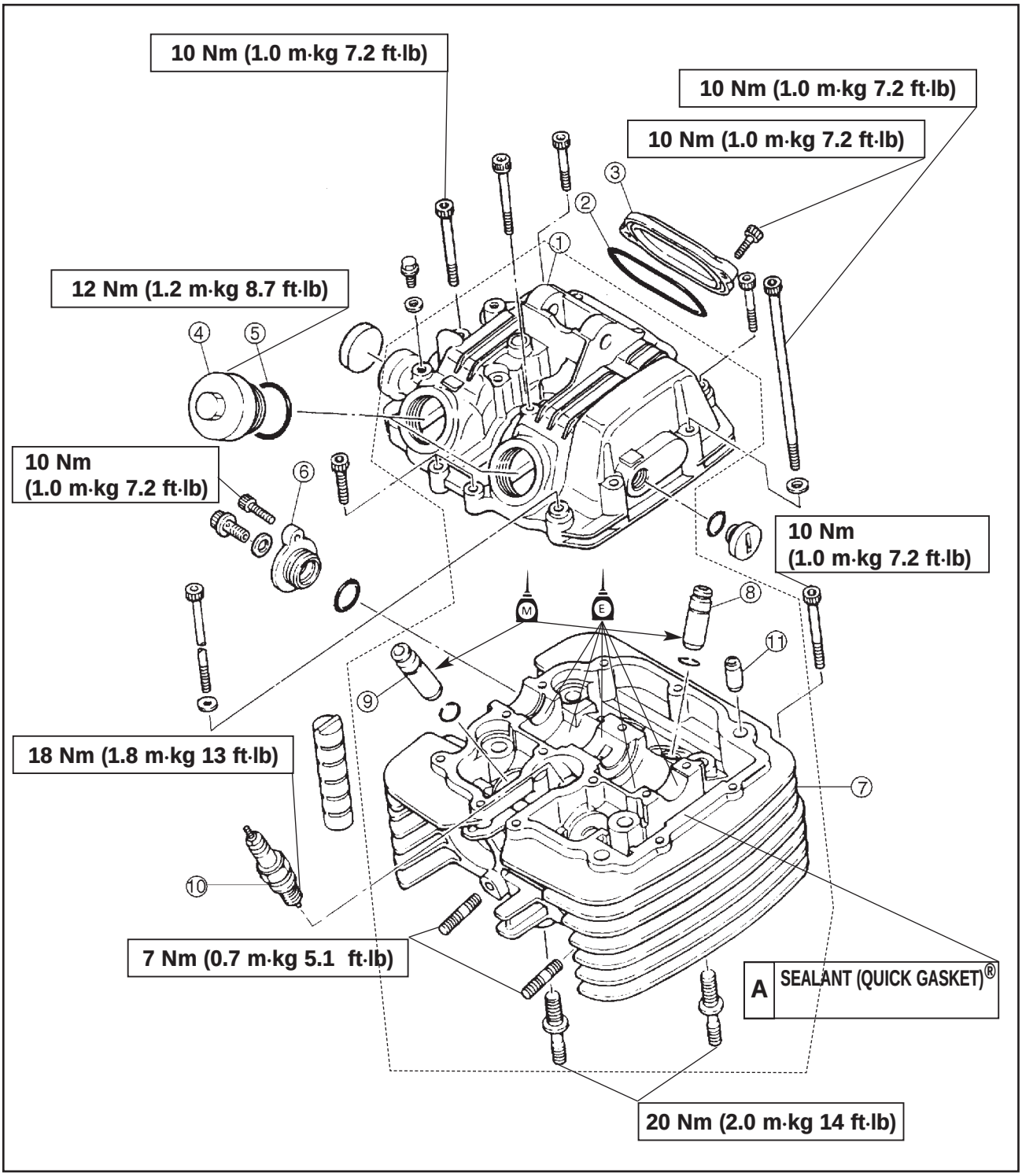

CAMSHAFT AND TIMING CHAIN

(1) Camshaft
(2) Cam chain sprocket
(3) Chain stopper guide
(4) Timing chain
(5) Chain stopper guide
(6) Gasket
(7) Chain tensioner

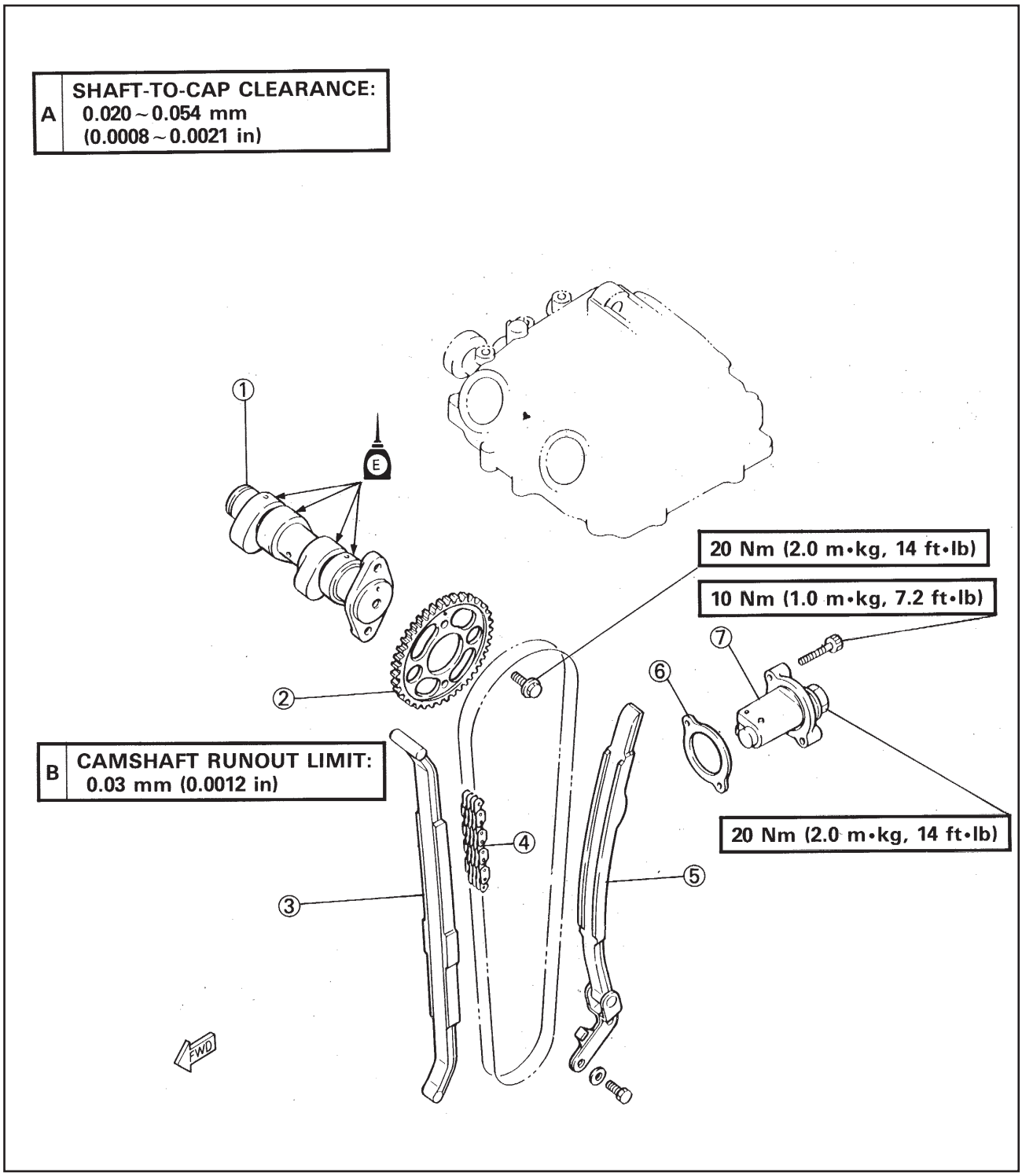

PISTON, CYLINDER, CYLINDER HEAD AND CAMSHAFT

1. Apply:
   - 4-stroke engine oil (on piston pin).

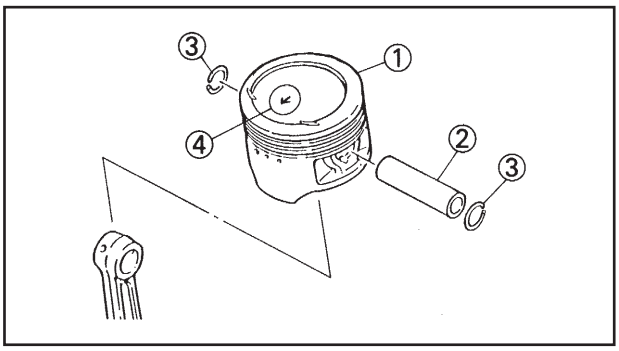

2. Install:
   - Piston (1)
   - Pin (2)
   - Circlip (3)

NOTE:
- Arrow (4) on the piston must point towards the front of the engine.
- Before installing the piston pin circlips, cover the crankcase with a clean cloth to prevent foreign bodies falling into it.

WARNING

Always use new circlips for the piston pin.

3. Install:
   - Dowel pins (1)
   - O-Ring (2)

4. Install:
   - Gasket (1) (cylinder)

NOTE:
Install the cylinder gasket as shown in the illustration.

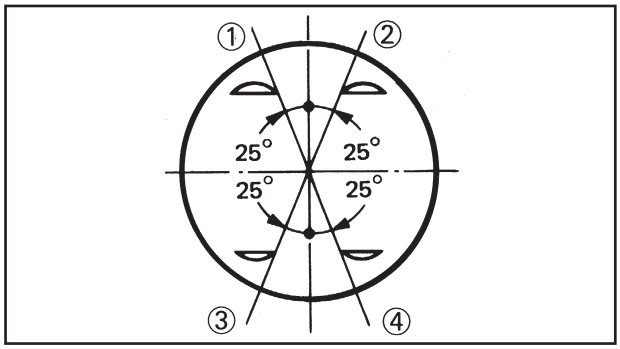

5. Offset the piston ring end gaps as illustrated in the figure.

NOTE:
- Check that the marks and numbers stamped by the manufacturer on the piston rings face upwards.
- Before installing the cylinder, lubricate the piston rings liberally with 4-stroke engine oil.

(1) Upper ring
(2) Scraper (lower ring)
(3) Scraper (upper ring)
(4) Lower ring

6. Install:
   - Cylinder (1)

NOTE:
- Install the cylinder to the piston with one hand while one hand while compressing the piston rings with the other.
- Bind the timing chain with wire and slip it through the appropriate slot.

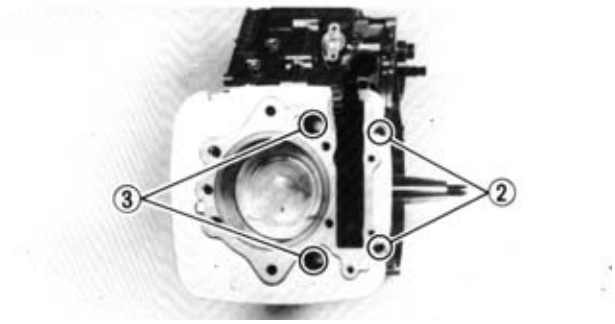

Cylinder:
Screw (2):
10 Nm (1.0 mkg)
Cap nut (3):
42 Nm (4.2 mkg)
Nut (4):
42 Nm (4.2 mkg)

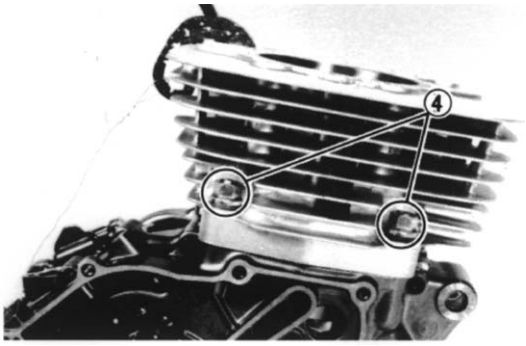

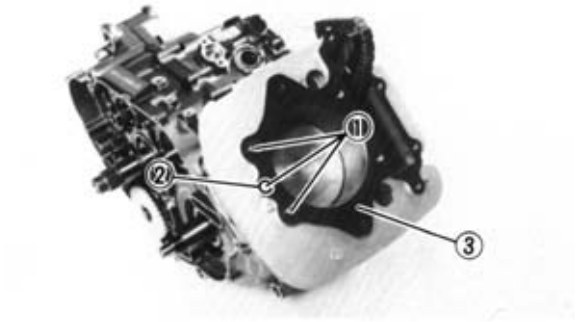

7. Install:
   - Dowel pins (1)
   - O-Ring (2)
   - Gasket (3) (cylinder head)

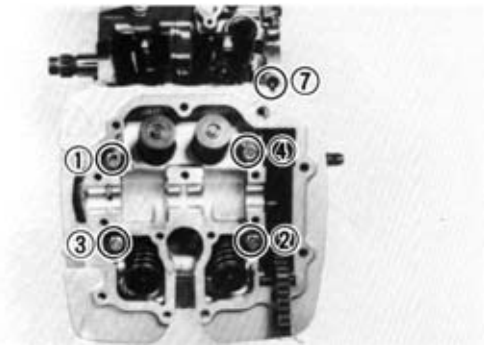

8. Install:
   - Cylinder head

NOTE:

Tighten screws beginning with the one with the lowest number.

Cylinder head:
Screw (l), (2), (3) and (4):
29 Nm (2.9 mkg)
Nut (5) and (6):
22 Nm (2.2 mkg)
Screw (7):
10 Nm (1.0 mkg)

9. Install:
   - Chain stopper guide
   - Camshaft
   - Cam chain sprocket

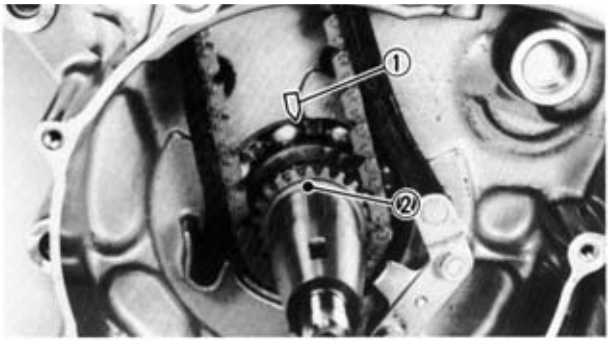

▼▼▼▼▼▼▼▼▼▼▼▼▼▼▼▼▼▼▼▼▼▼▼▼▼▼▼▼▼▼▼▼

Timing chain installation:

- Install the cam chain on the cylinder head as illustrated (compression phase timing).
- Run the cam shaft in an anticlockwise direction until the mark on the crankcase (1) and the point on the cam chain gearwheel (2) are aligned.

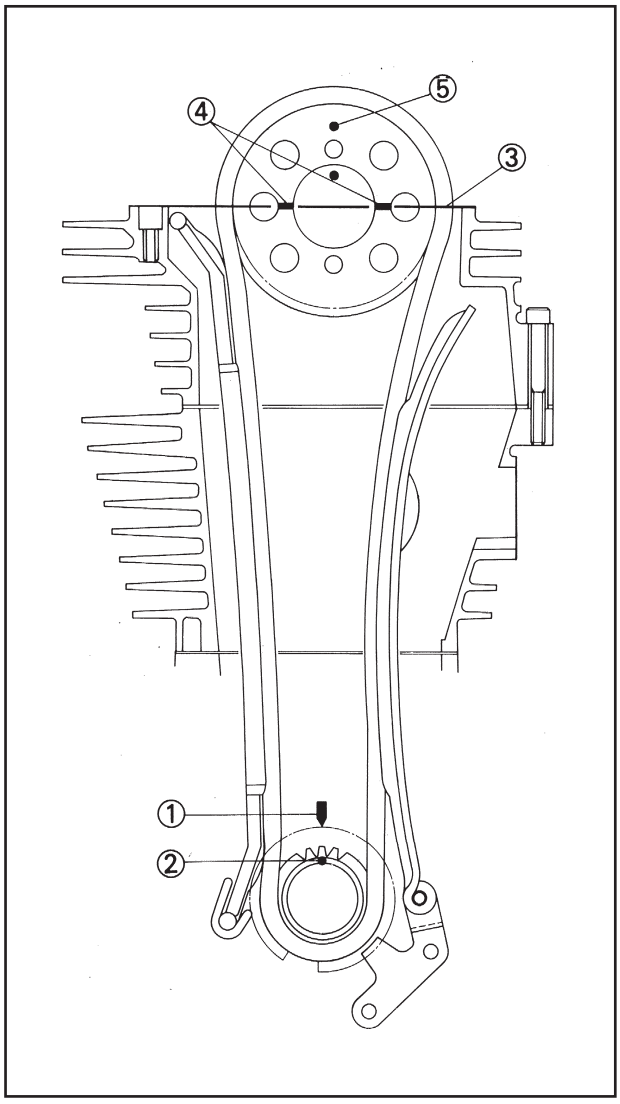

- Install the gear wheel with the timing marks as shown in the figure and tighten the screws on the gear wheel by hand.

(3) Upper cylinder head surface
(4) Timing marks
(5) Upper position mark

- When pushing the chain tensioner be sure that the marks on the cam chain sprocket are aligned with the top surface of the cylinder head.
- If the marks are aligned, tighten the cam chain sprocket bolts.

Bolt (cam chain sprocket):
20 Nm (2.0 mkg)

- If the marks are not aligned, replace the chain sprocket mating piston and chain.

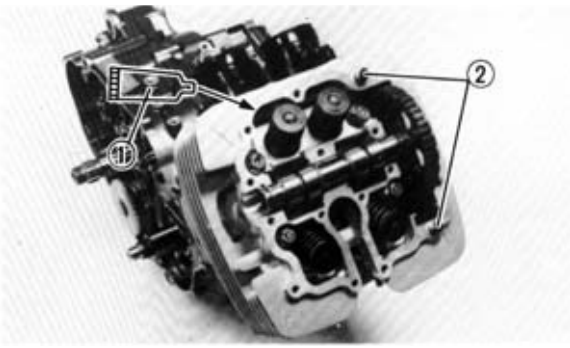

10. Apply:
    - Yamaha Bond N° 1215® (1)
      (on the mating surfaces)

Sigillante (Quick Gasket)®
Yamaha bond N° 1215®:
P/N. 90890-85505

11. Install:
    - Dowel pins (2)
12. Install:
    - Cap
    - Cylinder head cover

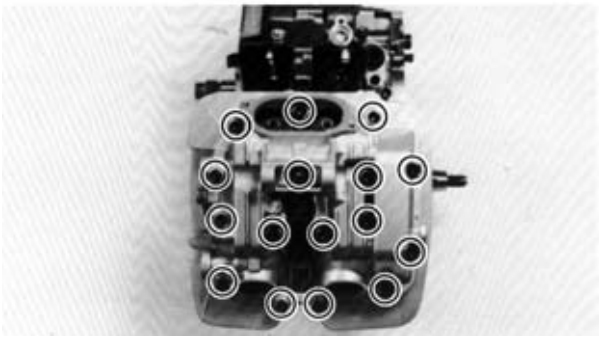

NOTE:
Cross-tighten the screws repeatedly.

Bolt (cylinder head cover):
10 Nm (1.0 mkg)

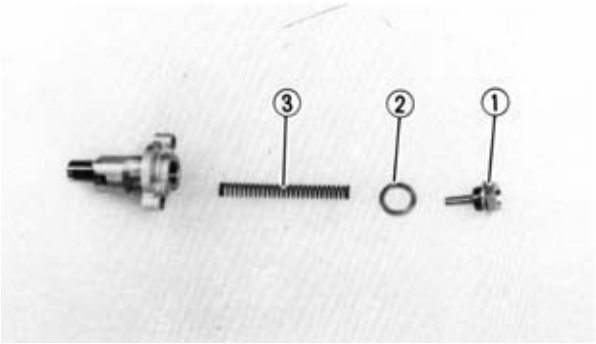

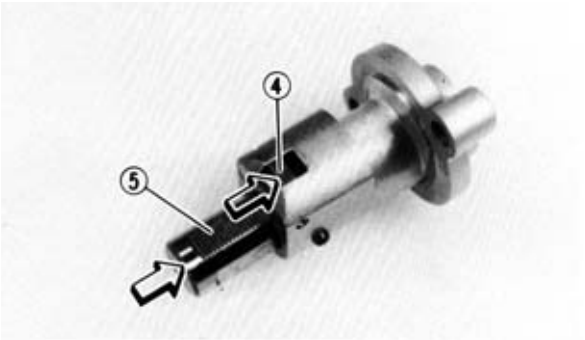

13. Install:
    - Chain tensioner

▼▼▼▼▼▼▼▼▼▼▼▼▼▼▼▼▼▼▼▼▼▼▼▼▼▼▼▼▼▼▼▼

Assembly steps:

- Remove the chain tensioner screw (1), the washer (2) and the spring (3).
- Release the chain tensioner unidirectional cam (4) and push the thrust rod (5).
- Install the chain tensioner in the cylinder with a new gasket.

	Screw (chain tensioner body): **10 Nm (1.0 mkg)**

WARNING

Always use a new gasket.

- Install the spring, the washer and the chain tensioner.

	Chain tensioner screw: **20 Nm (2.0 mkg)**

▲▲▲▲▲▲▲▲▲▲▲▲▲▲▲▲▲▲▲▲▲▲▲▲▲▲▲▲▲▲▲▲

14. Adjust:
    - Valve clearance

	Valve clearance: **Intake** **0.05 ~ 0.10 mm** **Exhaust** **0.12 - 0.17 mm**

See section “VALVE CLEARANCE ADJUSTMENT” in CHAPTER 3.

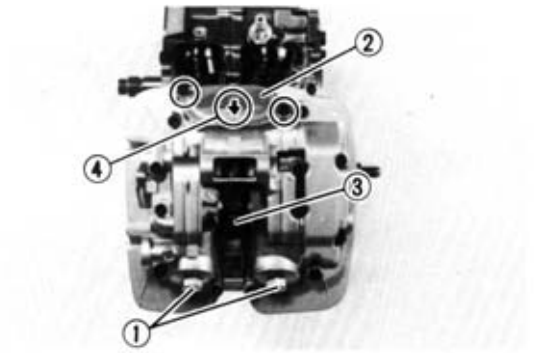

15. Install:
    - Tappet covers (1) (exhaust)
    - Tappet cover (2) (intake)
    - Spark plug (3)

Tappet cover (exhaust):
12 Nm (1.2 mkg)
Screw (tappet cover-intake):
10 Nm (1.0 mkg)
Spark plug:
18 Nm (1.8 mkg)

NOTE:
The tappet cover (intake) should be assembled with the arrow (4) pointing upwards.

AC GENERATOR

(1) Rotor
(2) Pick-up coil
(3) Stator winding

PICKUP COIL RESISTANCE:
230 Ω ± 20% at 20°C (68°F)
(Blue/Yellow - Green/White)

CHARGING COIL RESISTANCE:
0.65 Ω ± 20% at 20°C (68°F)
(White - White)

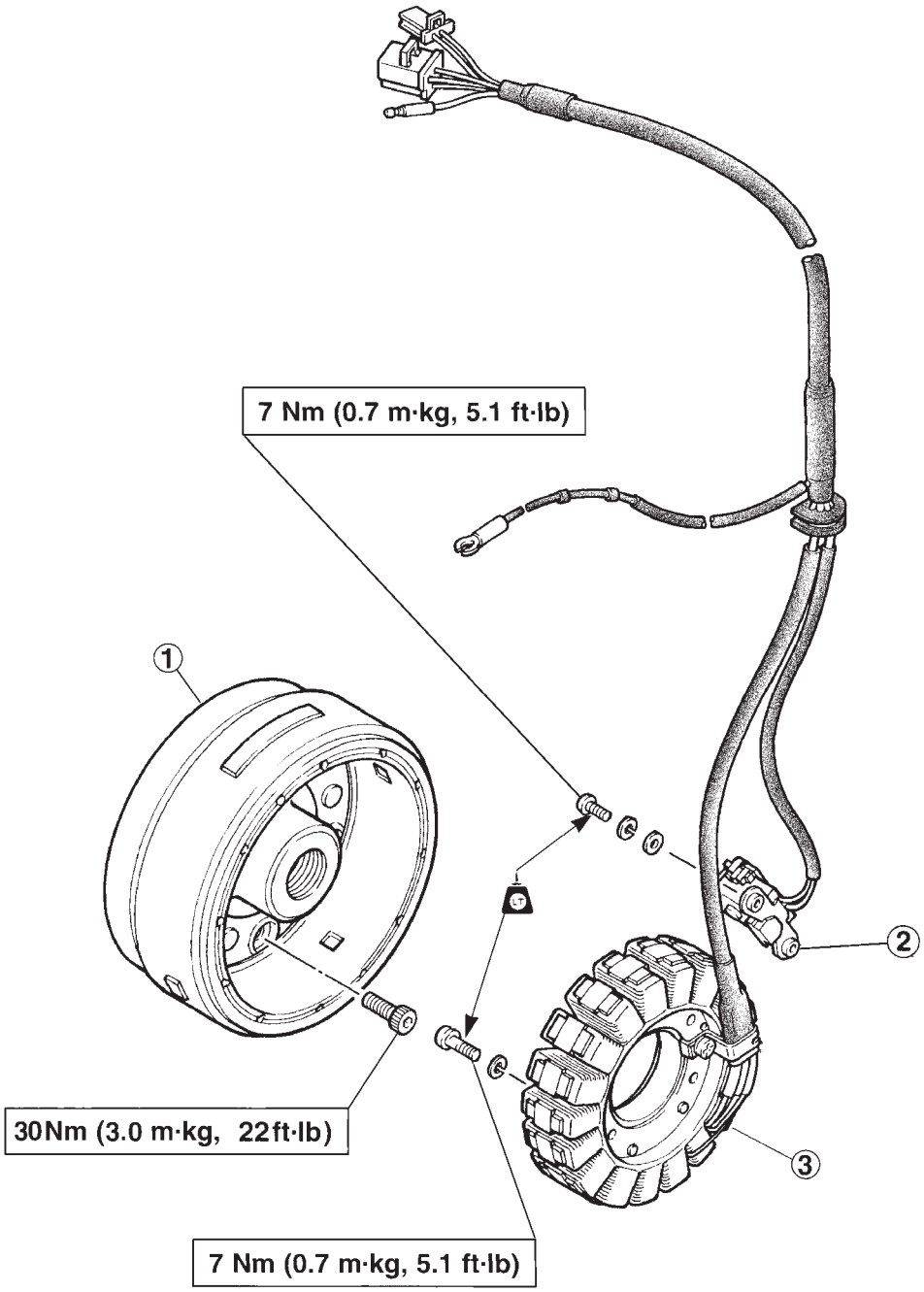

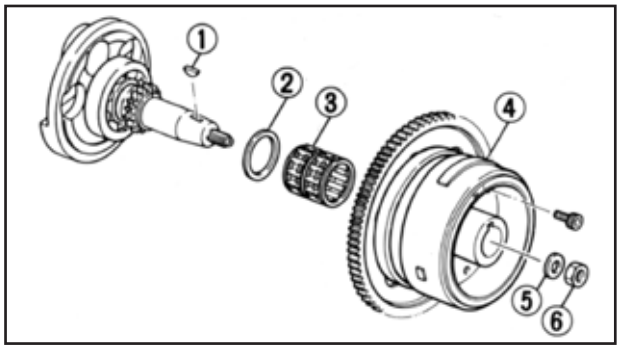

AC GENERATOR

1. Install:
   - Woodruff key (1)
   - Washer (2)
   - Bearing (3)
   - Rotor (4)
   - Washer (5)
   - Nut (6)

NOTE:
When installing the AC generator rotor, check that the woodruff key fits properly into its seat on the crankshaft. Apply a thin layer of lithium soap-based grease on the conical tip of the crankshaft.

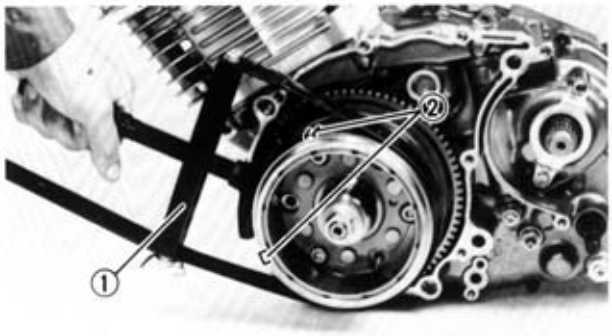

2. Tighten:
   - Nut (rotor)

	Nut (rotor): **120 Nm (12.0 mkg)**

NOTE:
To tighten the nut, lock the rotor with the special tool (1).

	Sheave holder: **P/N. 90890-01701**

CAUTION:
Be careful not to touch the jutting edges (2) on the rotor with the sheave holder.

OIL FILTER AND OIL HOSES

(1) Oil filter
(2) Filter cover
(3) Oil hose
(4) Oil hose
(5) Oil delivery hose
(6) Oil drain plug

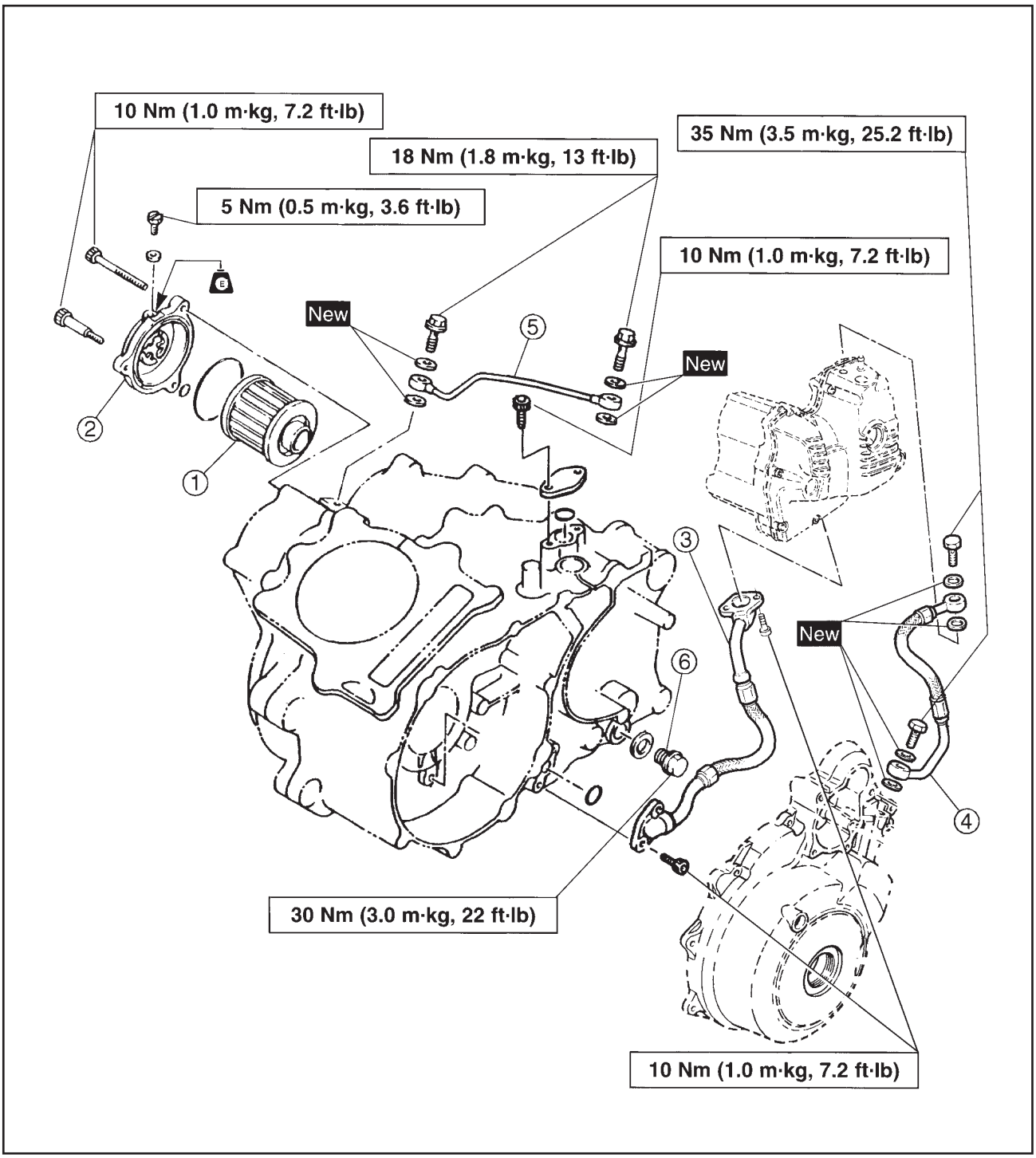

BALANCER SHAFT GEAR AND PRIMARY TRANSMISSION GEAR

(1) Straight key
(2) Balancer shaft gear
(3) Breather plate
(4) Lock washer
(5) Nut
(6) Plate washer
(7) Straight key
(8) Plate
(9) Balancer shaft drive gear
(10) Plate
(11) Primary drive gear
(12) Lock washer
(13) Nut

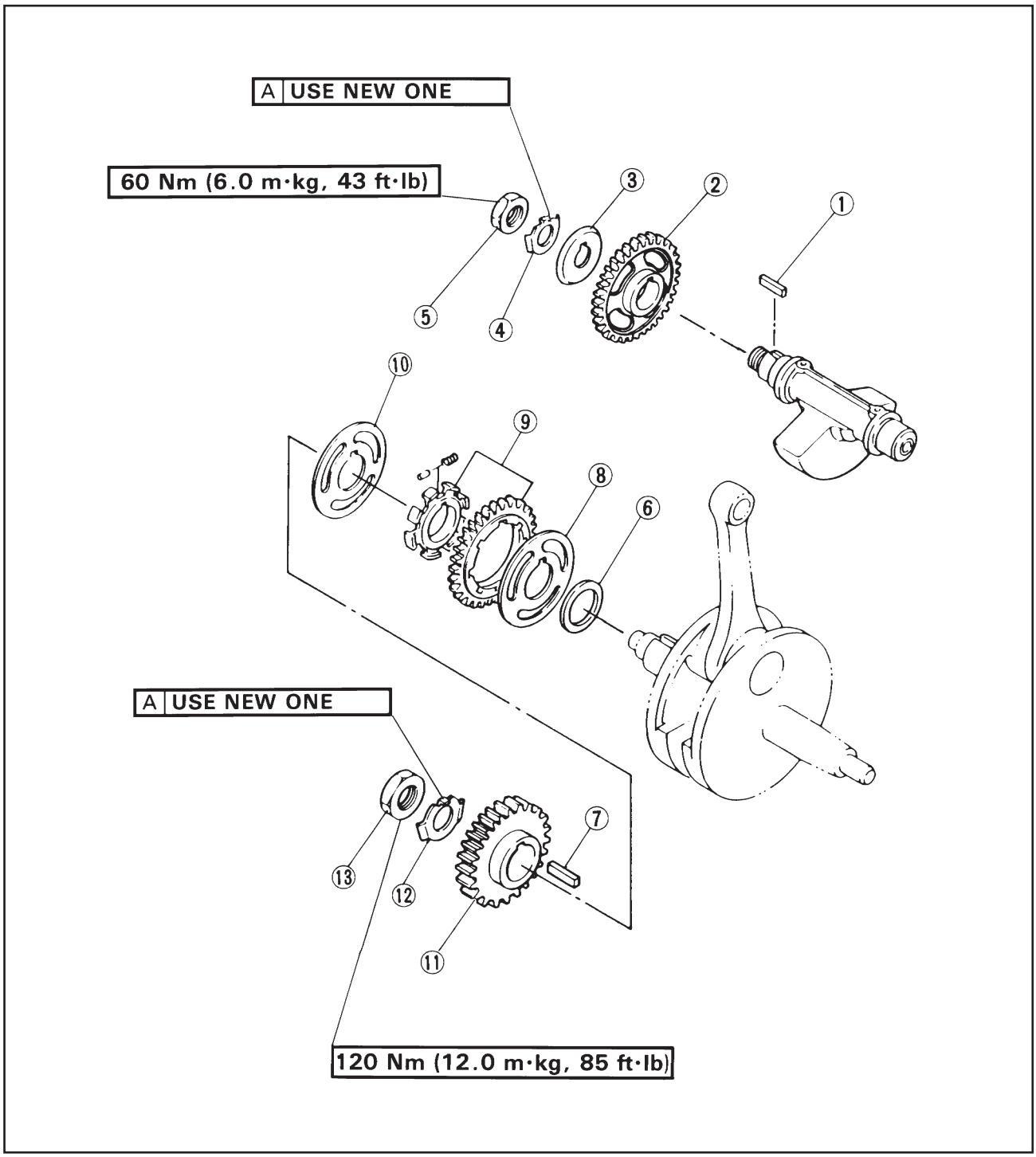

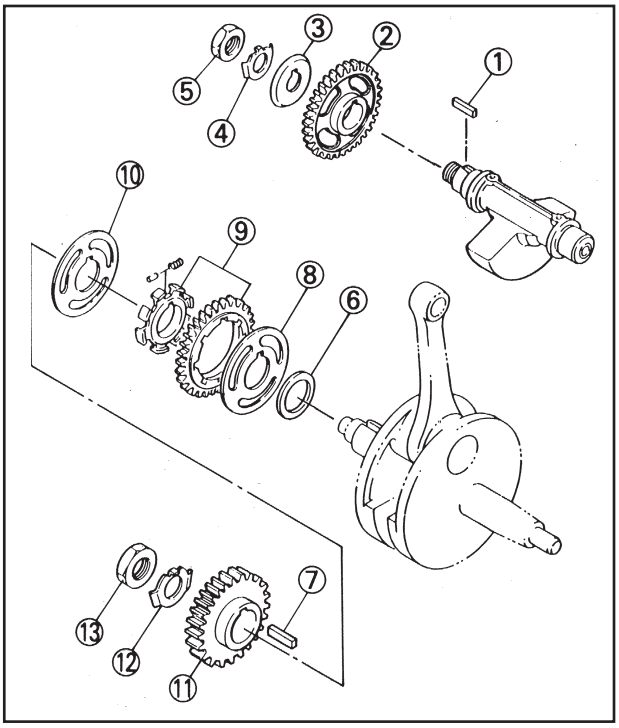

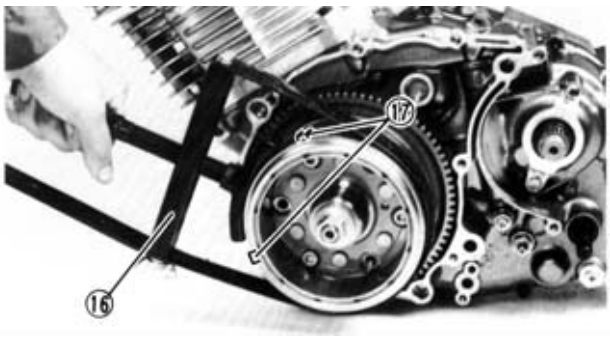

BALANCER SHAFT GEAR AND PRIMARY TRANSMISSION GEAR

1. Install:
   - Key (1)
   - Balancer shaft gear (2)
   - Plate (3)
   - Lock washer (4)
   - Nut (5) (balancer shaft gear)
   - Washer (6)
   - Key (7)
   - Plate (8)
   - Balancer shaft drive gear (9)
   - Plate (10)
   - Primary drive gear (11)
   - Lock washer (12)
   - Nut (13) (primary drive gear)

Nut (balancer shaft gear):
60 Nm (6.0 mkg)
Nut (primary drive gear):
120 Nm (12.0 mkg)

NOTE:
When installing the drive gear, align the mark on it (14) with that of the balancer shaft gear (15).

WARNING
Always use a new lock washer.

NOTE:
To tighten nuts (5) and (13), keep the AC generator rotor still with the special tool (16).

Sheave holder:
P/N. 90890-01701

CAUTION:
Be careful not to touch the jutting part (17) of the rotor with the sheave holder.

2. Bend the lock washer tab along the face of the nut.

CLUTCH

(1) Compression spring
(2) Pressure plate
(3) Push rod
(4) Ball
(5) Friction plate (type A)
(6) Clutch boss spring
(7) Clutch plate
(8) Friction plate (type B)
(9) Clutch boss
(10) Thrust plate
(11) Primary driven gear comp.
(12) Push rod
(13) Push lever
(14) Primary drive gear

A	FRICTION PLATE:	
Type	Thickness	Wear Limit
A	2.94 ~ 3.06 mm (0.116 ~ 0.120 in)	2.8 mm (0.110 in)
B	2.72 ~ 2.88 mm (0.107 ~ 0.113 in)	2.6 mm (0.102 in)

B CLUTCH SPRING MINIMUM FREE LENGTH: 42.8 mm (1.685 in)

C CLUTCH PLATE WARPAGE LIMIT: 0.2 mm (0.008 in)

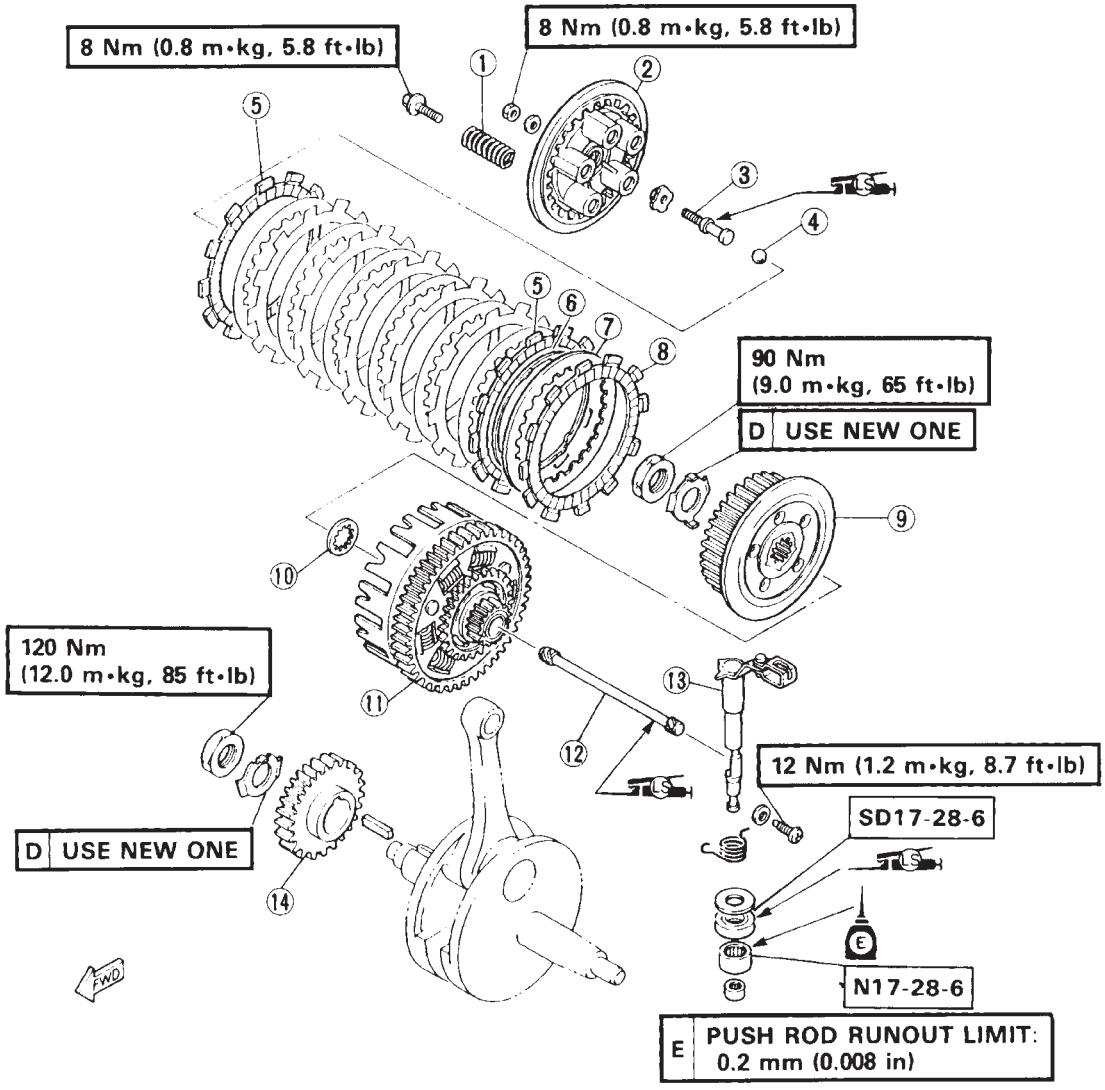

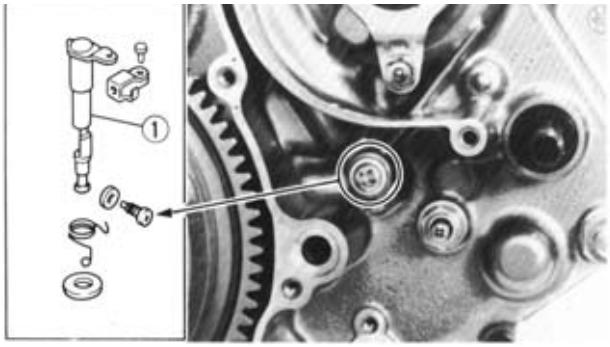

CLUTCH

1. Install:
   - Plain washer
   - Spring
   - Push lever (1)

	Screw (push lever): **12 Nm (1.2 mkg)**

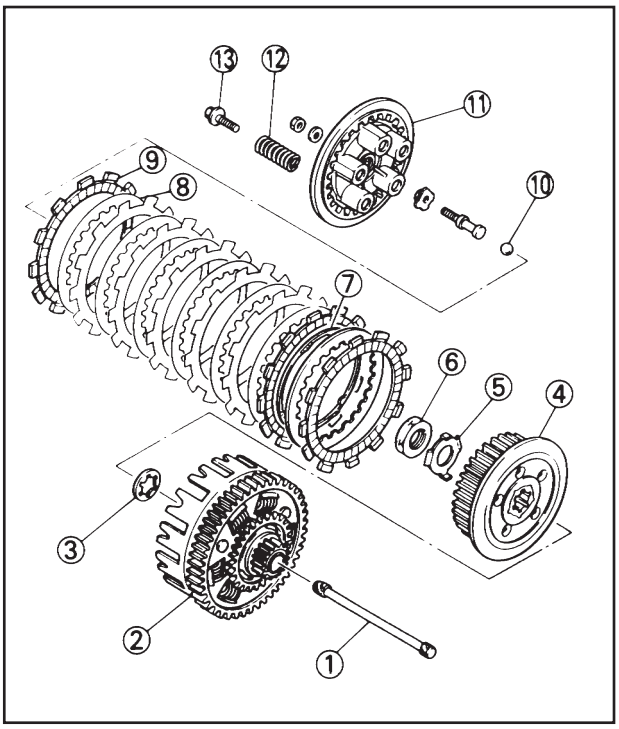

2. Install:
   - Push rod (1)
   - Primary driven gear comp. (2)
   - Thrust plate (3)
   - Clutch boss (4)
   - Lock washer (5)
   - Nut (6) (clutch boss)
   - Clutch boss spring (7)
   - Clutch plate (8)
   - Friction plate (9)
   - Ball (10)
   - Pressure plate (11)
   - Compression spring (12)
   - Screw (pressure plate) (13)

	Nut (clutch boss): **90 Nm (9.0 mkg)** **Pressure plate screw:** **8 Nm (0.8 mkg)**

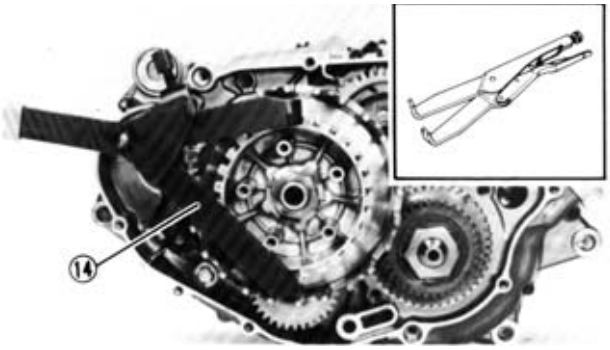

NOTE:

- To tighten the nut (clutch boss), lock the clutch drum with the special tool (14).

	Clutch holding tool: **P/N. 90890-04086**

- Bend the lock washer tab along the face of the nut.

WARNING

Always use a new lock washer.

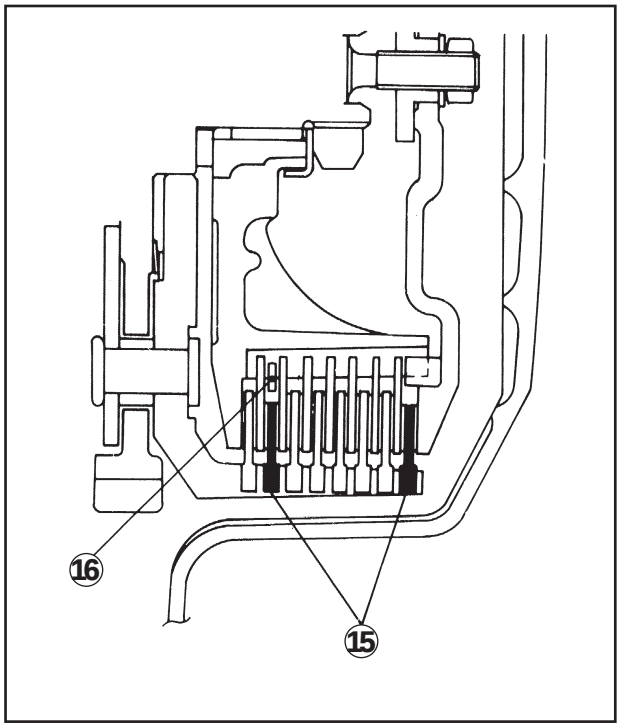

NOTE:
Install the friction and clutch plates to the clutch boss, beginning and ending with a friction plate.

CAUTION:

- **The two friction plates (type A) (15) with the widest internal diameter should be assembled in second and last place.**
- **The clutch boss spring (16) should be placed inside the second friction plate.**

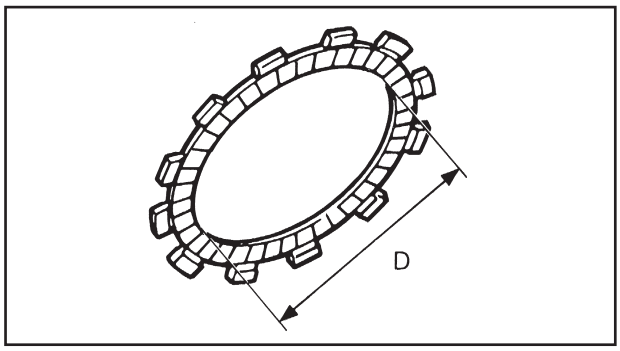

	Friction plate	
	Type “A”	Type “B”
Quantity	2	6
Internal diameter “D”	116 mm	113 mm

NOTE:
Align the mark on the clutch boss (17) with the arrow (18) on the pressure plate.

3. Adjust:
   - Clutch (free play)
     See section “CLUTCH ADJUSTMENT” in CHAPTER 3.
4. Install:
   - Straight key
   - Gasket
   - Crankcase cover (right) (1)
   - O-Ring
   - Oil filter
   - Filter cover (2) (with O-Ring)
     See section “Engine oil replacement (with oil filter change)” in CHAPTER 3.

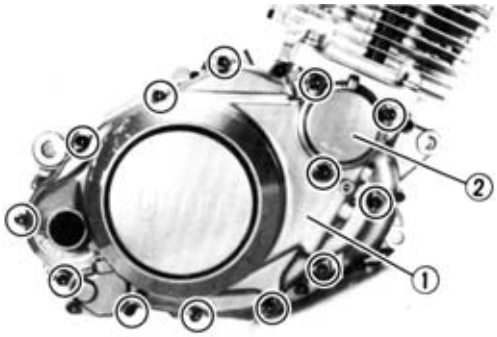

Bolt (crankcase cover):
10 Nm (1.0 mkg)

STARTER GEARS

(1) Starter gear
(2) Starter neutral gear 1
(3) Starter neutral gear 2
(4) Starter gear
(5) Starter clutch

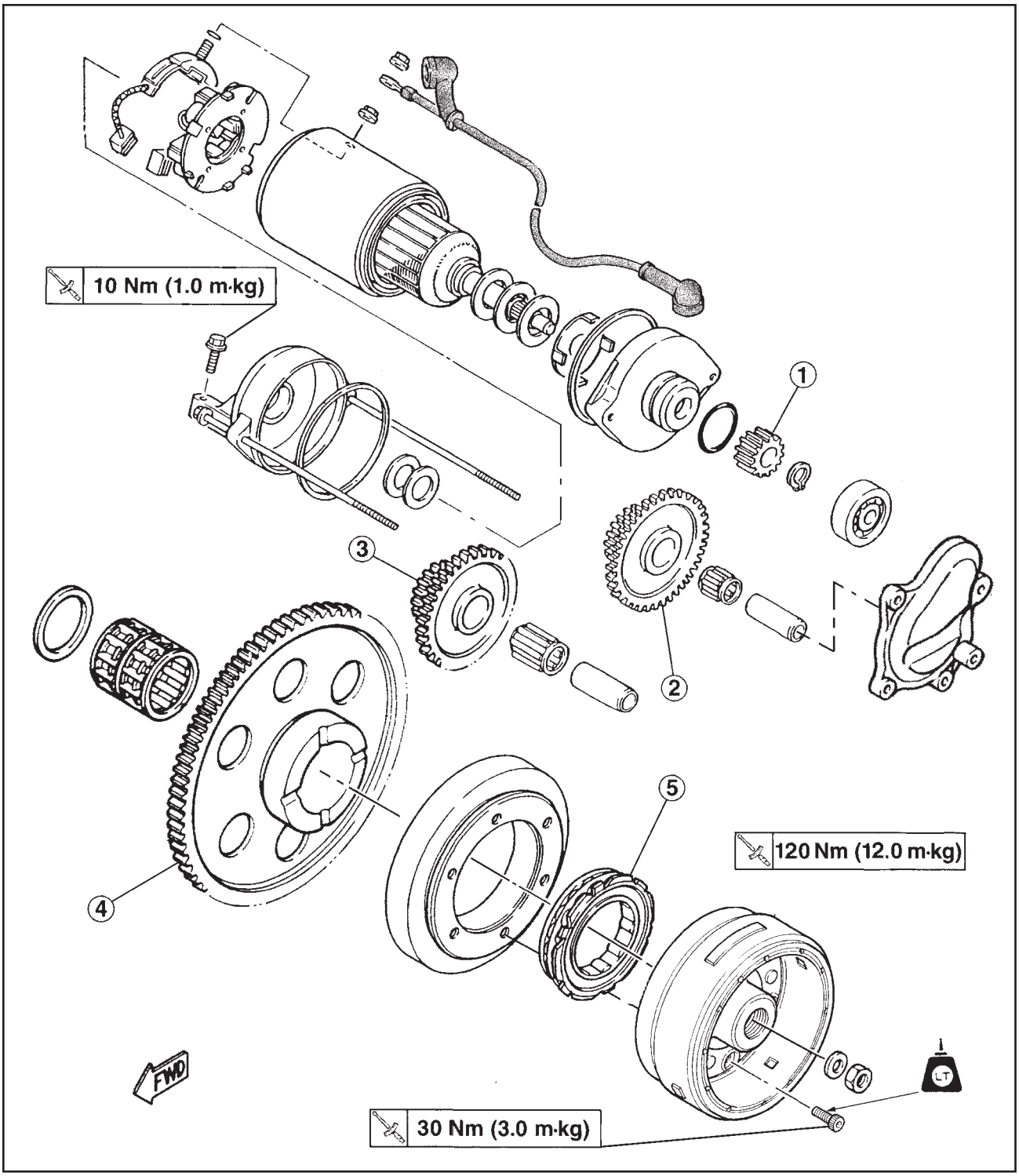

STARTER NEUTRAL GEAR AND CRANKCASE COVER (L))

1. Install:
   - Stator winding (1)
   - Pick-up coil (2)
   - Cable clamp (3)

Screws (stator and coil):
7 Nm (0.7 mkg)
Use LOCTITE ®
Screw (cable clamp):
7 Nm (0.7 mkg)

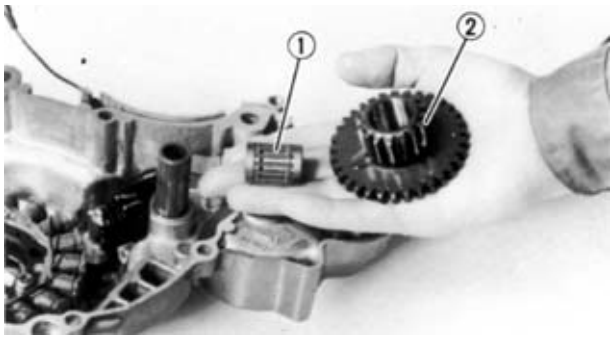

2. Install:
   - Bearing (1)
   - Intermediate starter gear 2 (2)

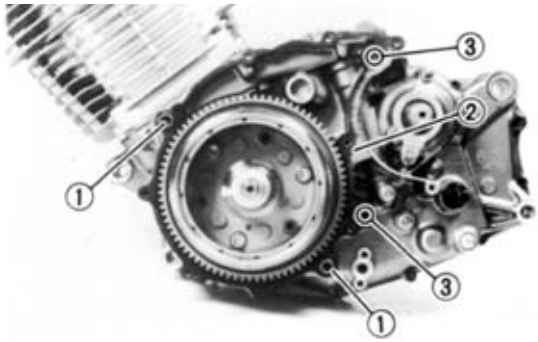

3. Install:
   - Centring pin (1)
   - Gasket (2)
   - O-Ring (3)
   - Crankcase cover (L) (4)
   - Plugs

Bolt (crankcase cover):
10 Nm (1.0 mkg)

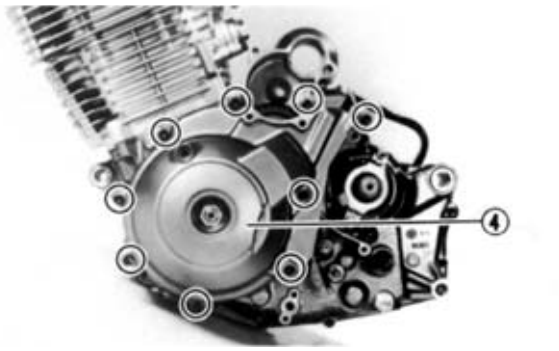

WARNING

Always use a new gasket.

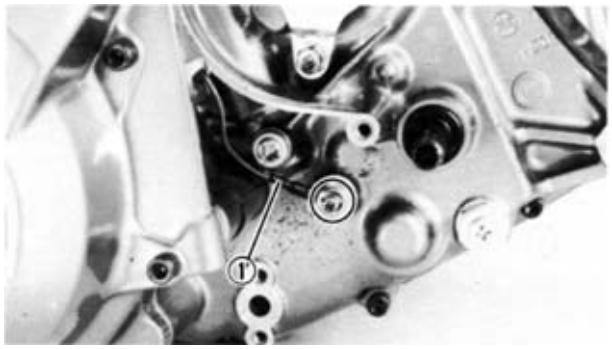

4. Install:
   - Neutral switch cable (1)

5. Install:
   - Shaft (1)
   - Bearing (2)
   - Starter intermediate gear 1 (3)

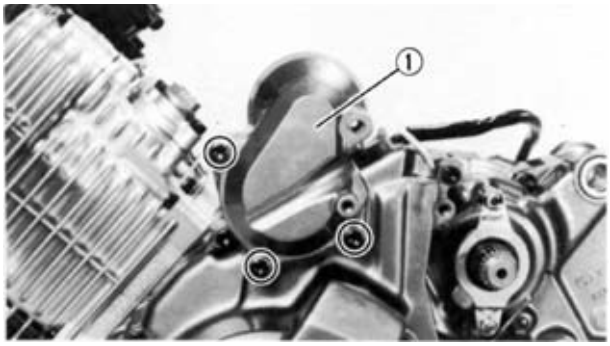

6. Install:
   - Centring pins
   - Gasket
   - Cover (1) (starter intermediate gear)

	Screw (cover): **10 Nm (1.0 mkg)**

ENGINE REASSEMBLY

To reassemble the engine, repeat the procedures described in the paragraph " ENGINE REMOVAL" in this chapter in reverse order. Pay attention to the following points.

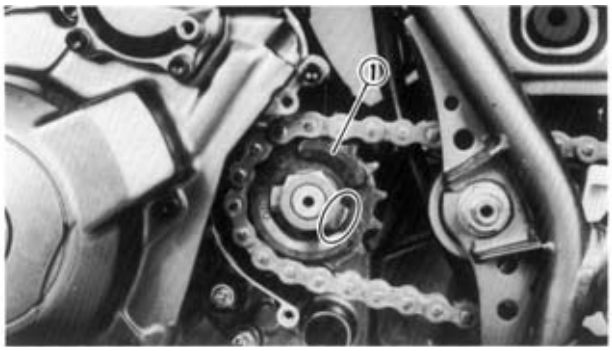

1. Install:
   - Sprocket (1)
   - Drive chain

Nut (sprocket):
110 Nm (11.0 mkg)

NOTE:
Bend the lock washer tab along the face of the nut.

WARNING

Always use a new lock washer.

2. Install:
   - Cover (sprocket)
   - Shift pedal
   - Footrest (L)

Screw (sprocket cover):
10 Nm (1.0 mkg)
Use LOCTITE®
Screw (shift ptidal):
10 Nm (1.0 mkg)
Screw (footrest):
48 Nm (4.8 mkg)

3. Adjust:
   - Drive chain slack

Drive chain slack:
30 ~ 40 mm

See section "DRIVE CHAIN SLACK INSPECTION AND ADJUSTMENT" in CHAPTER

4. Install:
   - Oil delivery hose (1)

Union bolt:
18 Nm (1.8 mkg)

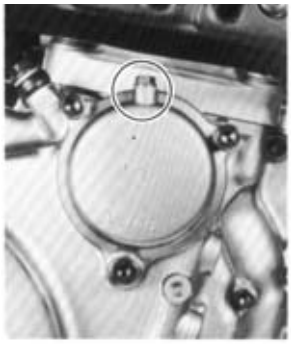

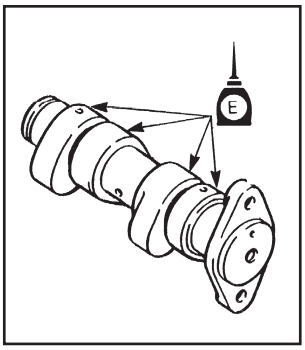

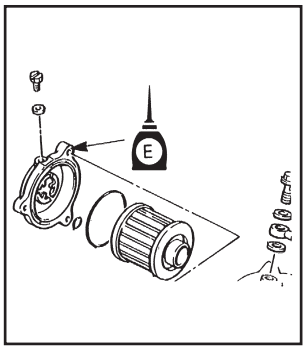

5. Remove:
   - Tappet cover (intake)
   - Air bleeder screw (oil filter cover)
6. Apply:
   - 4-stroke engine oil
   - (on the top side of the camshaft and in the oil filter housing).

CAUTION:

Liberally apply 4-stroke engine oil in the oil passage in the crankcase to prevent damage to the engine.

Amount of oil:
Camshaft
0.1 litres
Oil filter housing
0.06 litres

7. Install:
   - Tappet cover (intake)
   - Air bleeder screw (oil filter cover)

Screw (tappet cover):
10 Nm (1.0 mkg)
Air bleeder screw (oil filter cover):
5 Nm (0.5 mkg)

8. Adjust:
   - Clutch cable free play

Free play (at end of lever):
10 ~ 15 mm

See section “CLUTCH ADJUSTMENT” in CHAPTER 3.

9. Install:
   - Carburetor

	Screw (clamp): **2 Nm (0.2 mkg)**

See section “CARBURETOR-INSTALLATION” in CHAPTER 6.

10. Adjust:
    - Throttle cable free play

	Free play: **3 ~ 5 mm**

See section “THROTTLE CABLE FREE PLAY ADJUSTMENT” in CHAPTER 3.

11. Install:
    - Fuel tank

CAUTION:

Do not start the engine until it is filled with oil.

12. Fill with:
    - Engine oil

	Amount of oil (total): **3.0 litres**

See section “ENGINE OIL REPLACEMENT” in CHAPTER 3.

13. Check:
    - Engine idle speed

	Engine idle speed: **1.150 ~ 1.450 rpm**

See section “IDLE SPEED ADJUSTMENT” in CHAPTER 3.

14. Install:
    - Seat

	Screw (seat): **10 Nm (1.0 mkg)**

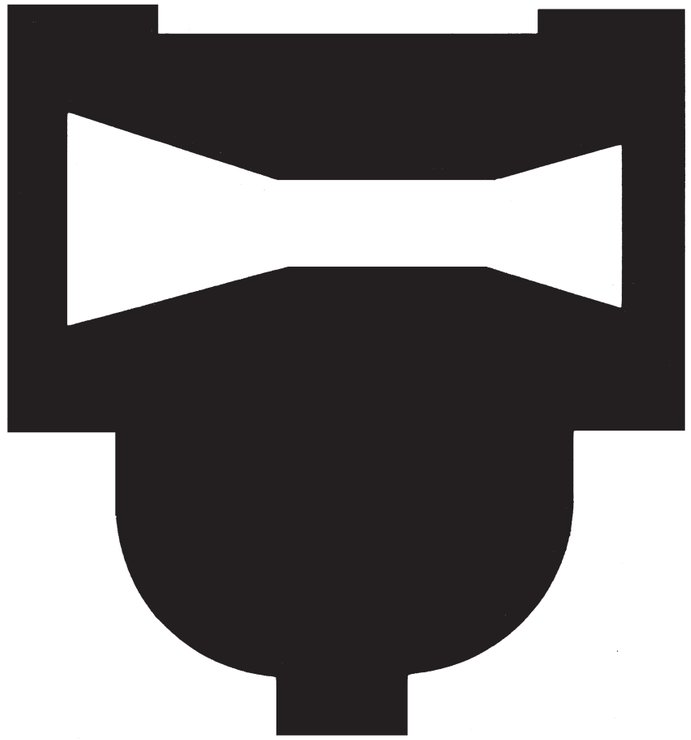

CARB 6

CHAPTER 6
CARBURETOR

CARBURETOR REMOVAL 6-1

TECHNICAL SPECIFICATIONS/TIGHTENING TORQUES/EXPLODED VIEW 6-3
SECTION VIEW 6-5

CARBURETOR DISASSEMBLY 6-6

CARBURETOR INSPECTION 6-9

CARBURETOR ASSEMBLY 6-11

FUEL LEVEL ADJUSTMENT (CARBURETOR INSTALLED) 6-16

CARBURETOR

CARBURETOR REMOVAL

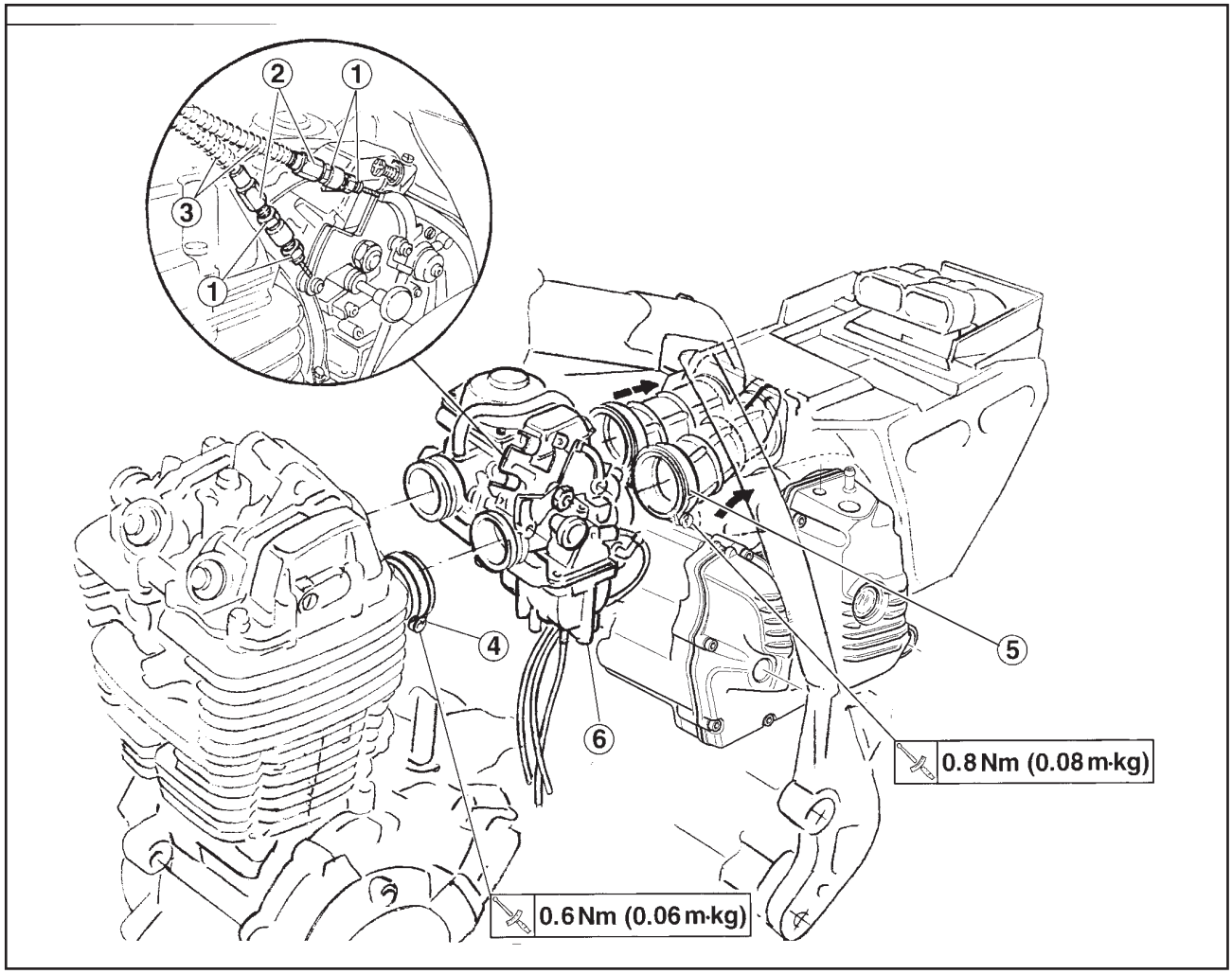

Order	Job name/Part name	Q.ty	Remarks
	Carburetor removal		Remove the parts in order.
	Seat		Refer to “SEAT, FUEL TANK AND REAR COWLING" section in CHAPTER 3.
	Fuel pipe Fuel tank		**NOTE:** Be sure the cap is properly tightened and the fuel cock is in the “OFF” position before removing the fuel tank.
1	Lock nut	4	Loosen.
2	Throttle cable adjuster	2	Screw.
3	Throttle cable	2	
4	Hose clamp	2	Loosen.

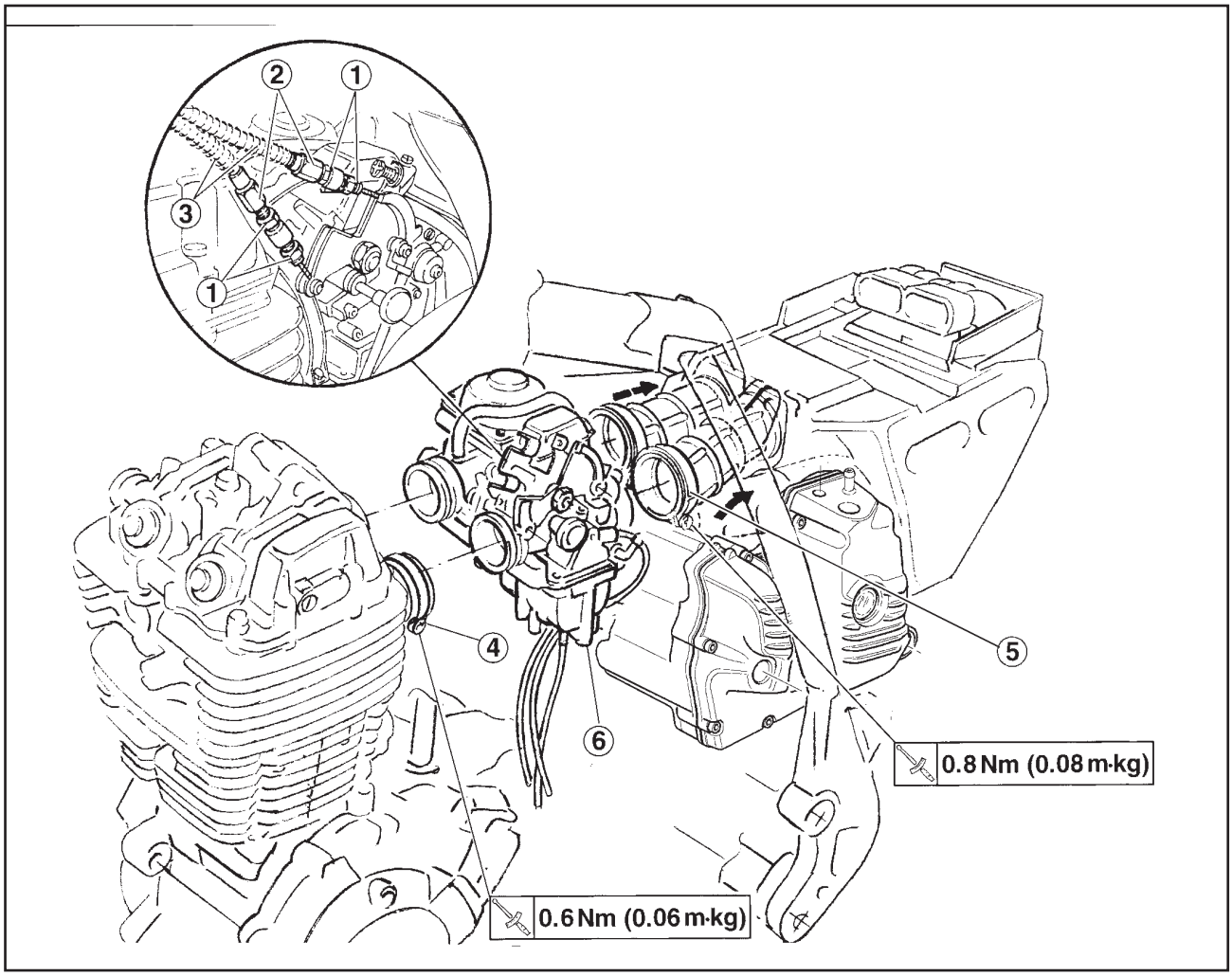

Order	Job name/Part name	Q.ty	Remarks
5	Hose clamp	2	Loosen. **NOTE:** Move carburetor manifold clamps towards the rear side.
6	Carburetor	2	Reverse the removal procedure for installation. Adjust throttle cable free play (refer to THROTTLE CABLE FREE PLAY ADJUSTMENT" section in CHAPTER 3). Adjust idle speed (refer to "IDLE SPEED ADJUSTMENT" section in CHAPTER 3).

TYPE: Y30PV-2ATK
MANUFACTURER: TEIKEI

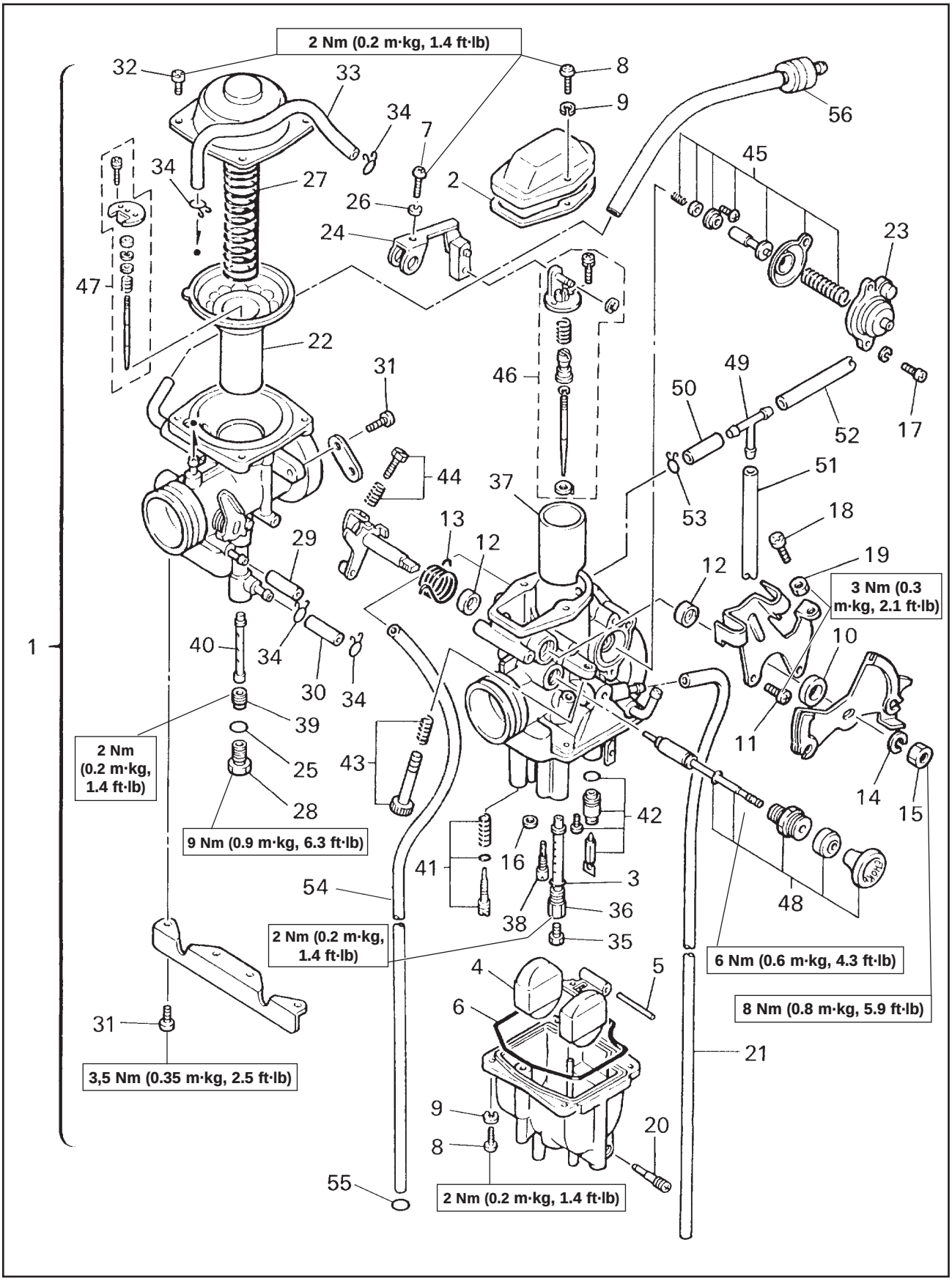

(1) Carburetor assembly
(2) Cover gasket
(3) Gasket, nozzle
(4) Float
(5) Float pin
(6) Float chamber gasket
(7) Screw
(8) Float chamber fastening screw
(9) Spring washer
(10) Collar
(11) Screw
(12) Gasket
(13) Throttle valve spring
(14) Spring washer
(15) Nut
(16) Gasket
(17) Screw
(18) Stop screw
(19) Nut
(20) Screw
(21) Hose
(22) Diaphragm
(23) Cover
(24) Bracket
(25) O-ring
(26) Spring washer
(27) Spring
(28) Drain valve
(29) Pipe
(30) Pipe
(31) Screw
(32) Screw
(33) Pipe
(34) Clip
(35) Main jet 1
(36) Main nozzle 1
(37) Throttle valve
(38) Pilot jet
(39) Main jet 2
(40) Main nozzle 2
(41) Pilot screw set
(42) Needle valve set
(43) Stop screw set
(44) Throttle screw set
(45) Diaphragm
(46) Needle set 1
(47) Needle set 2
(48) Starter set
(49) Way 3
(50) Hose
(51) Hose
(52) Hose
(53) Clip
(54) Breather pipe
(55) O-ring
(56) Pipe

SPECIFICATIONS

Main jet	#150 FIRST #145 SEC.
Starter jet	#74
Needle jet	5C5A-3/5 (FIRST) 5Y18-3/5 (SEC.)
Main nozzle	ø 2,6
Pilot jet	#50
Pilot air screw	2,75 ± 0,5 revs approx., open
Float height	27~29 mm
Fuel level	6~8 mm
Engine idle speed	1.150~1.450 r/min
Throttle valve seat	ø 2,5 mm

SECTION VIEW

(1) Needle jet (primary)
(2) Valve seat
(3) Needle valve
(4) Main nozzle (primary)
(5) Main jet (primary)
(6) Pilot air screw
(7) Needle jet (secondary)
(8) Main nozzle (secondary)
(9) Main jet (secondary)
[A] Primary carburetor
[B] Secondary carburetor
⇦ Air
⬅ Fuel
⇦ Mixture

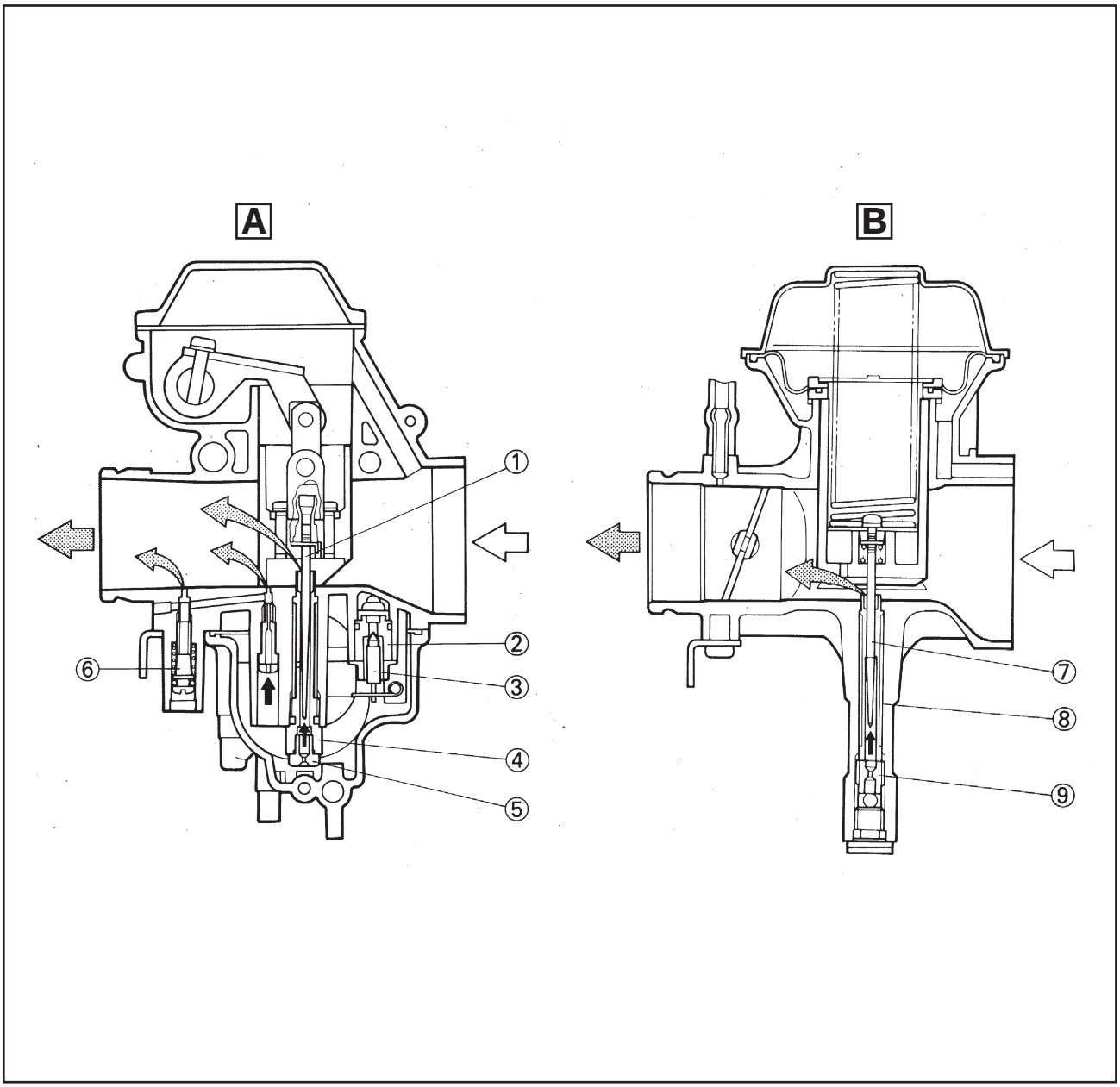

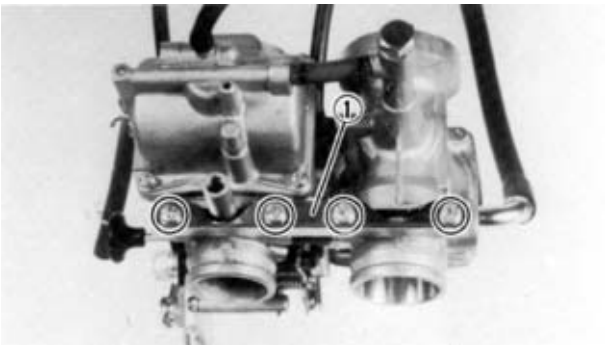

CARBURETOR DISASSEMBLY

1. Remove:
   - Support plate (1) (front)
   - Support plate (2) (rear)

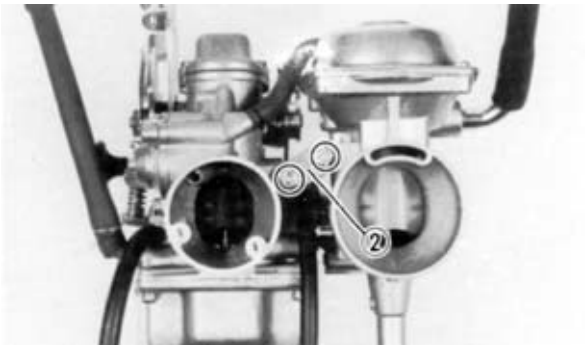

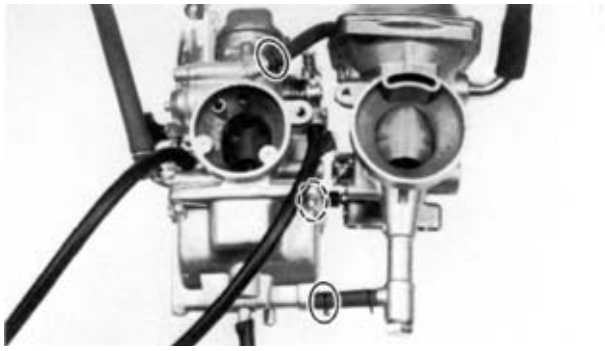

2. Separate:
   - Primary carburetor
   - Secondary carburetor

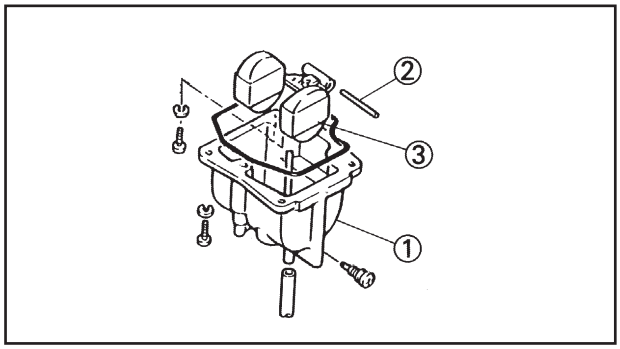

Primary carburetor

1. Remove:
   - Float chamber (1)
   - Float pin (2)
   - Float (3)

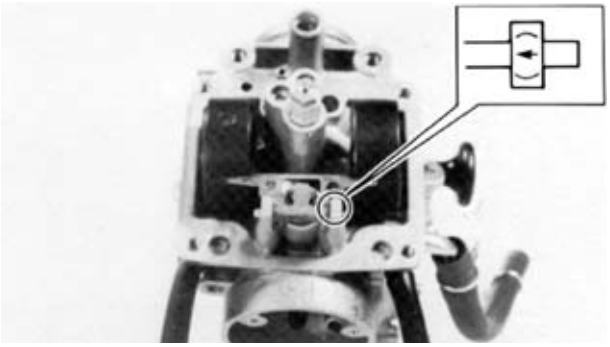

NOTE:

Remove the float needle in the direction of the arrow.

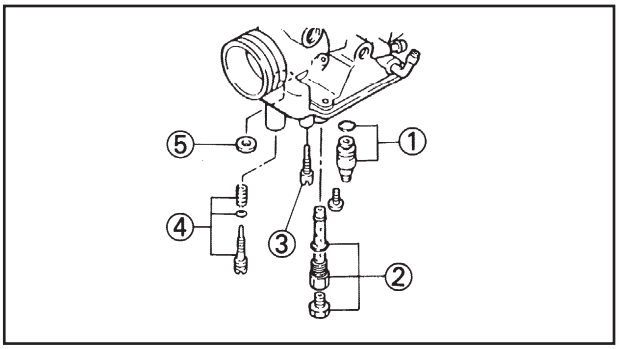

2. Remove:
   - Needle valve set/Valve seat (1)
   - Main jet/Main nozzle 1 (2)
   - Pilot jet (3)
   - Pilot screw set (4)
   - O-Ring (5)

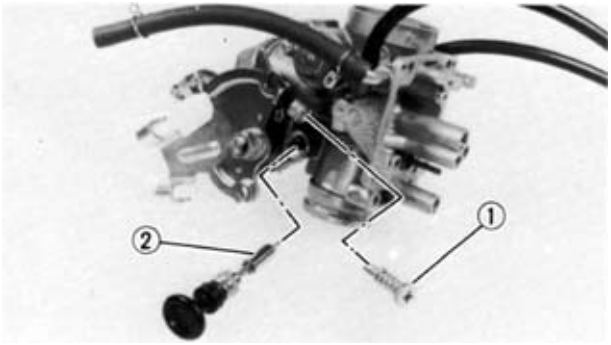

3. Remove:
   - Stop screw (1)
   - Starter set (2)

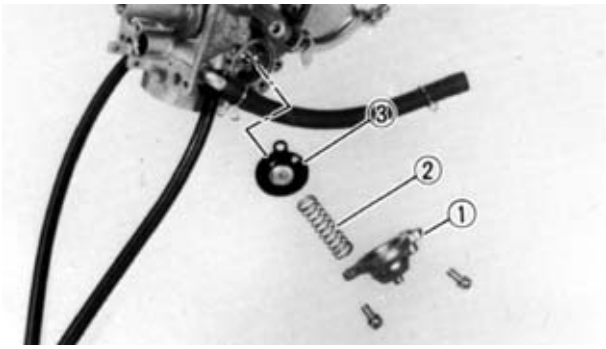

4. Remove:
   - Cover (1) (enrichment)
   - Spring (2)
   - Diaphragm (3)

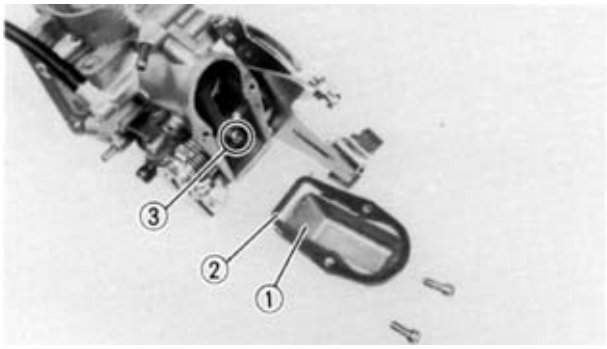

5. Remove:
   - Top cover (1)
   - Cover gasket (2)
   - Screw (3) (connecter comp.)

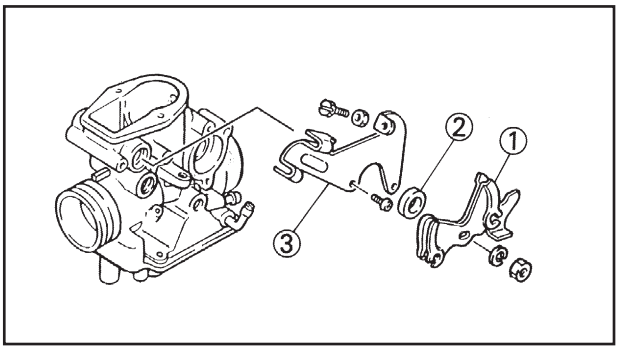

6. Remove:
   - Throttle lever (1)
   - Collar (2)
   - Cable holder (3)

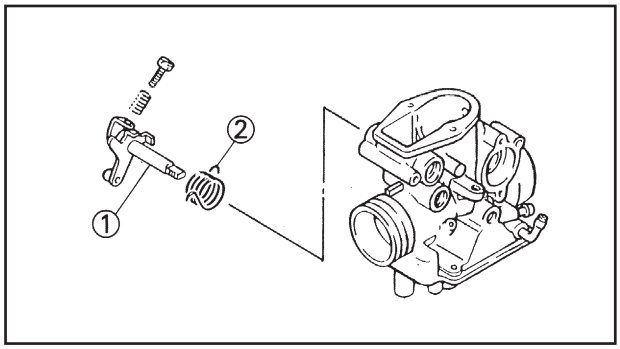

7. Remove:
   - Throttle shaft (1)
   - Spring (2)

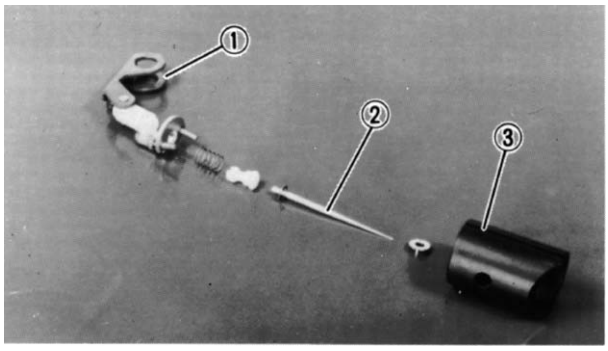

8. Remove:
   - Connecter comp. (1)
   - Needle jet (2)
   - Throttle valve (3)

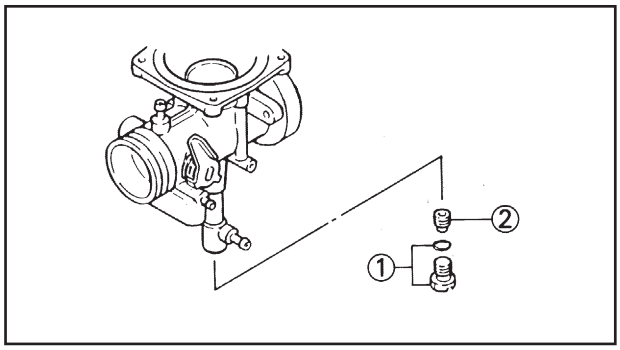

Secondary carburetor

1. Remove:
   - Drain plug (1)
   - Main jet (2)

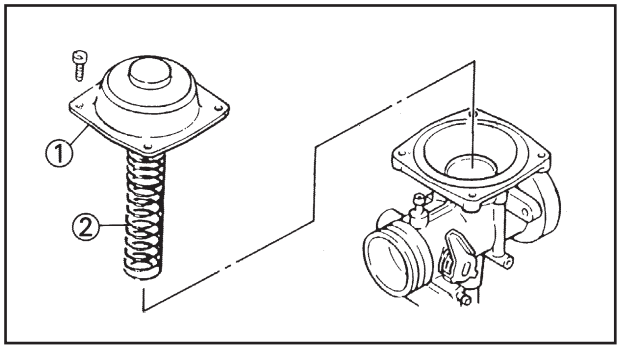

2. Remove:
   - Top cover (1)
   - Spring (2)

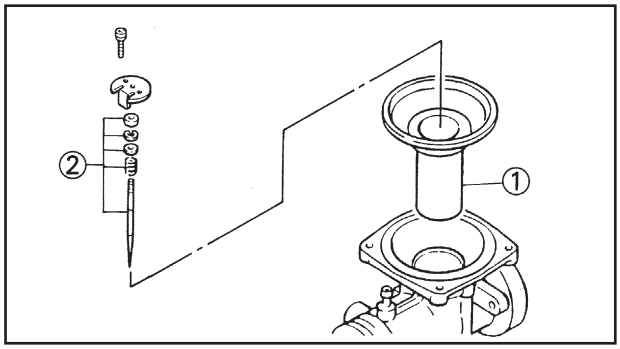

3. Remove:
   - Diaphragm (1)
   - Needle jet 2 (2)

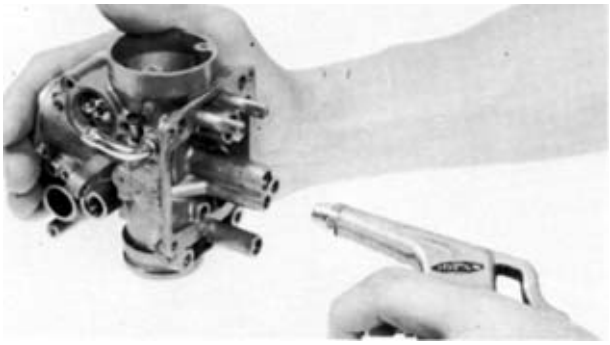

CARBURETOR INSPECTION

1. Inspect:
   - Carburetor body
     Soiled → Clean.

NOTE:
Use petroleum-based solutions to clean. Clean all passages and jets with compressed air.

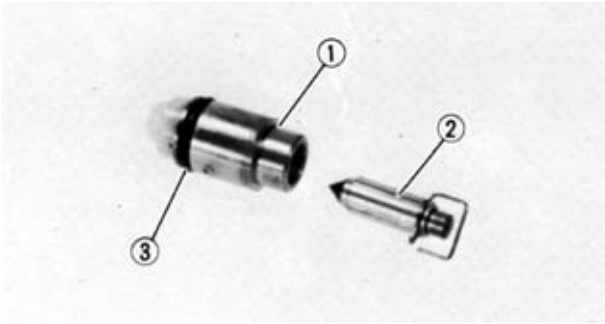

2. Inspect:
   - Valve seat (1)
   - Needle valve set (2)
     Wear/Corrosion → Replace.
   - O-Ring (3)
     Damaged → Replace.

NOTE:
Always replace the needle valve set and the valve seat together.

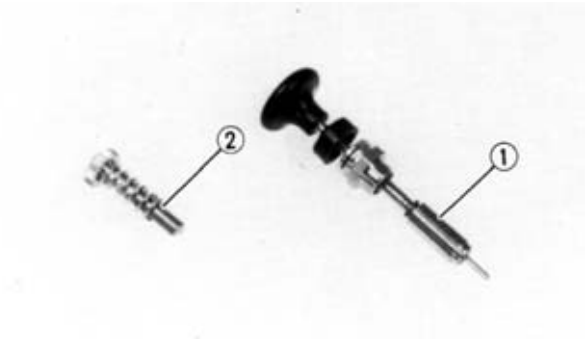

3. Inspect:
   - Starter piston (1)
     Wear/Damage → Replace
   - Stop screw (2)
     Damaged → Replace.

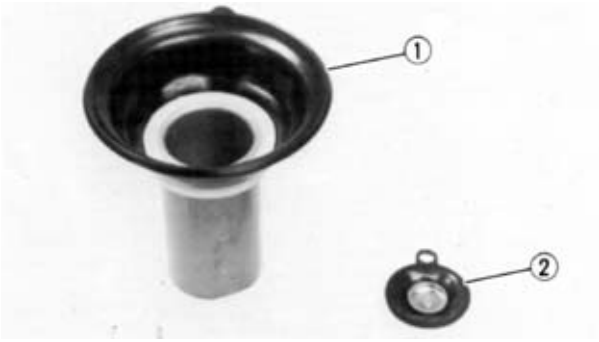

4. Inspect:
   - Diaphragm (1) (piston valve)
   - Diaphragm (2) (enrichment)
     Damaged → Replace.

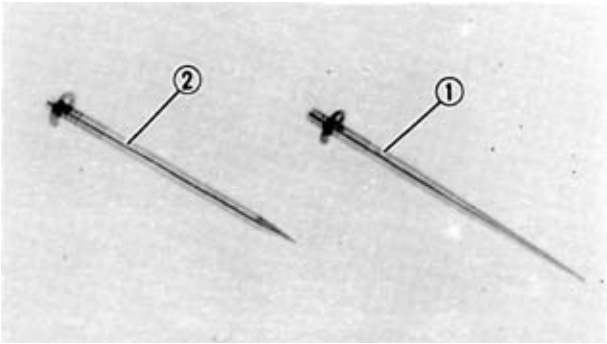

5. Inspect:
   - Needle jet (1) (primary)
   - Needle jet (2) (secondary)
     Curvature/Wear → Replace.

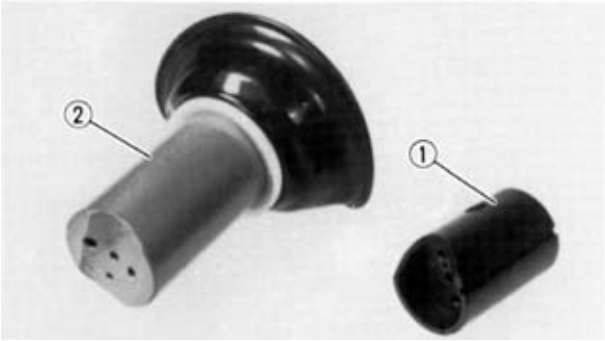

6. Inspect:
   - Throttle valve (1) (primary)
   - Diaphragm (2) (secondary)
     ear/Damaged → Replace.

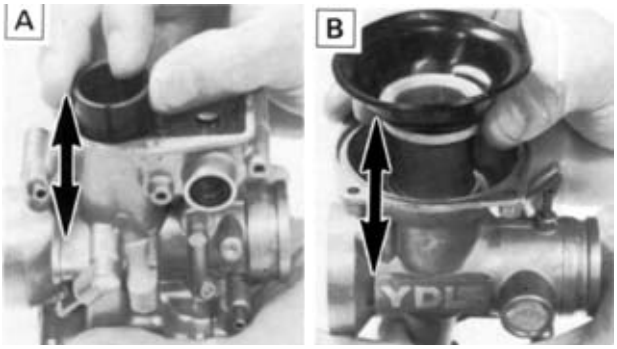

7. Check:
   - Free movement
     Hampered → Replace.
     Fit the throttle valve and diaphragm into the carburetor body and check that movement is free.
     [A] Primary carburetor
     [B] Secondary carburetor

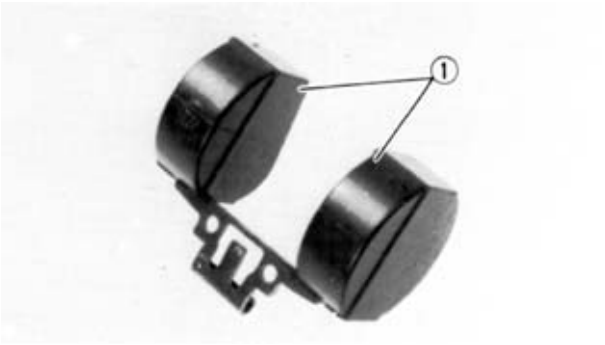

8. Inspect:
   - Float (1)
     Damaged → Replace.

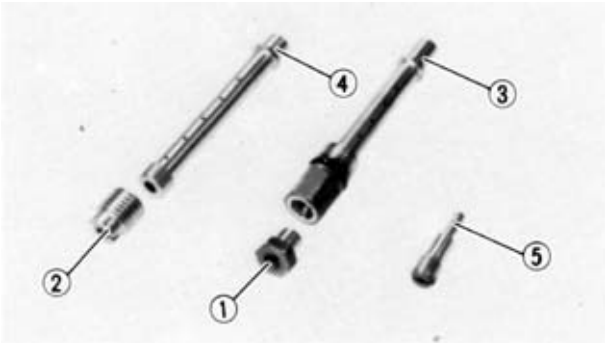

9. Inspect:
   - Main jet (1) (primary)
   - Main jet (2) (secondary)
   - Main nozzle (3) (primary)
   - Main nozzle (4) (secondary)
   - Pilot jet (5)

NOTE:
Clean jets with compressed air.

CARBURETOR ASSEMBLY

Perform “CARBURETOR DISASSEMBLY” operations in reverse order. Pay attention to the following points.

CAUTION:

Wash all parts with clean petrol prior to reassembly.

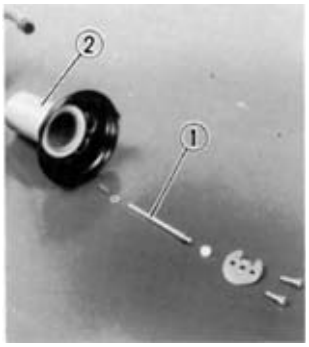

Secondary carburetor

1. Install:
   - Needle jet (1)
   - Diaphragm (2)
   - Spring

NOTE:

Draw the diaphragm tab level with the notch on the secondary carburetor.

2. Install:
   - Top cover

	Screw (top cover): **2 Nm (0.2 mkg)**

3. Install:
   - Main jet (secondary)
   - Drain vavle

	Main jet (secondary): **2 Nm (0.2 mkg)** **Drain valve:** **9 Nm (0.9 mkg)**

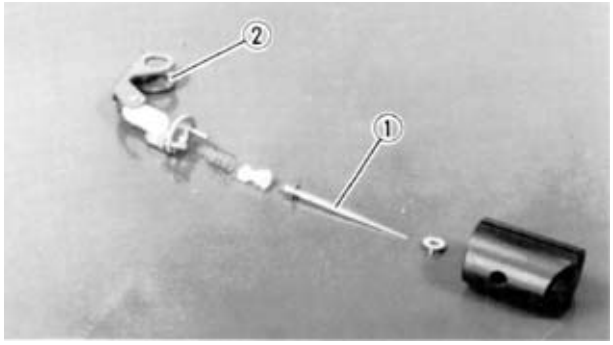

Primary carburetor

1. Install:
   - Needle jet (1)
   - Connecter comp. (2)

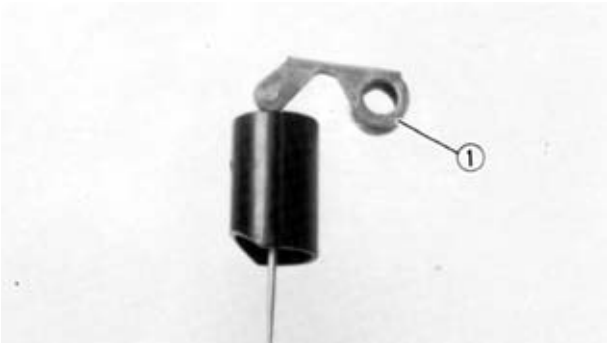

NOTE:
Check that the connecter comp. (1) is in the position shown in the figure.

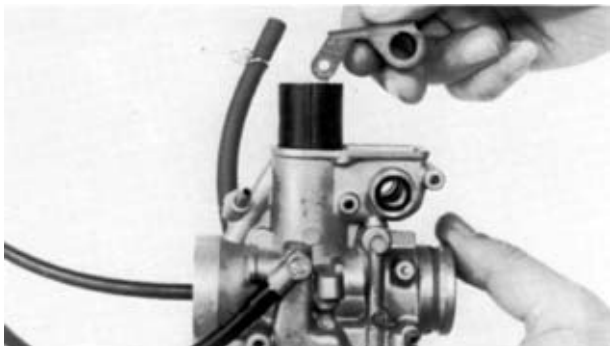

2. Install:
   - Throttle valve

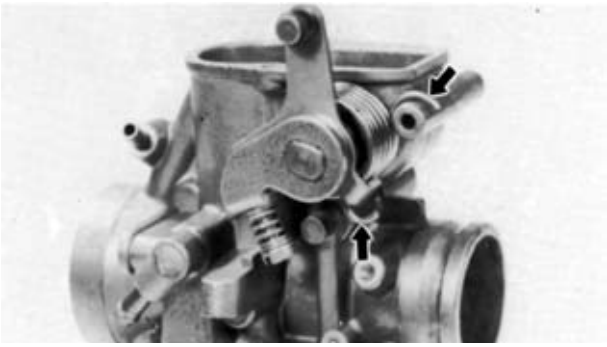

3. Install:
   - Spring
   - Throttle shaft

NOTE:
Assemble the spring as shown in the illustration.

4. Install:
   - Screw (connecter comp.)

NOTE:
Turn the throttle shaft clockwise (1/2 turn) to preload the spring and then, holding it in position, assemble the screw (connecter comp.).

	Screw (connecter camp.): **2 Nm (0.2 mkg)**

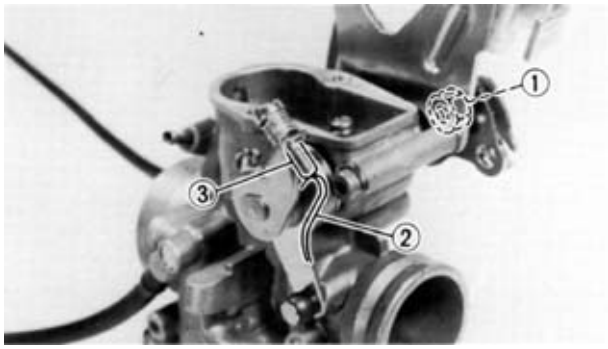

5. Install:
   - Cable holder
   - Collar
   - Throttle lever

NOTE:
Check that the throttle shaft lever (2) and the adjuster bolt (3) are aligned when tightening the throttle nut (1).

	Screw (cable holder): **3 Nm (0.3 mkg)**

6. Install:
   - Top cover

	Screw (top cover): **2 Nm (0.2 mkg)**

7. Install:
   - Diaphragm (1) (enrichment)

NOTE:
Make the diaphragm tab coincide with the gravity enricher notch.

8. Install:
   - Starter set
   - Stop screw

	Starter piston: **6 Nm (0.6 mkg)**

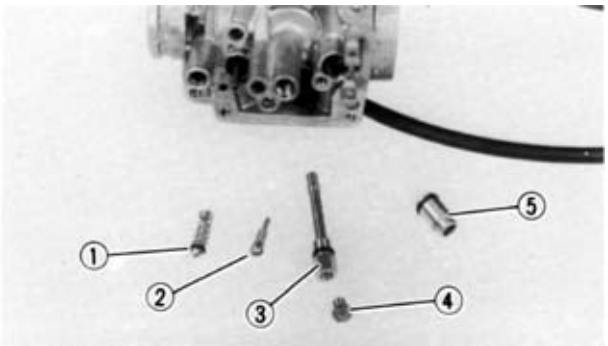

9. Install:
   - Pilot screw set (1)
   - Pilot jet (2)
   - Main nozzle 1 (3)
   - Main jet (primary) (4)
   - Valve seat (5)

	Main nozzle 1: **2 Nm (0.2 mkg)** **Screw (valve seat):** **2 Nm (0.2 mkg)**

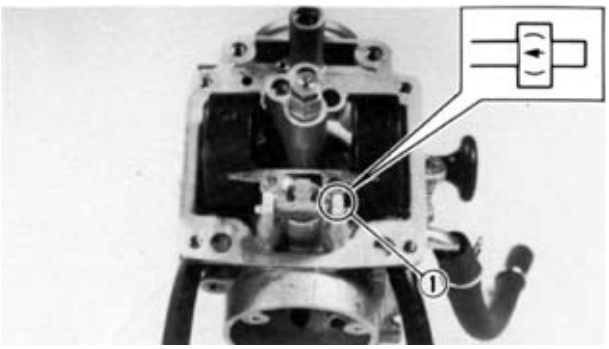

10. Install:
    - Float pin (1)

NOTE:
Assemble the float pin in the opposite direction to the arrow.

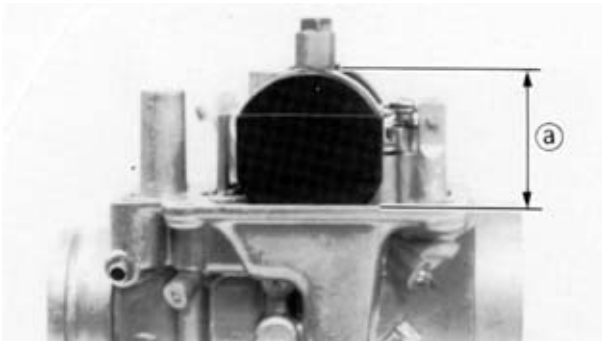

11. Measure:
    - Float height (a)
      Out of specification → Adjust.

Float height:
27.0 - 29.0 mm

▼▼▼▼▼▼▼▼▼▼▼▼▼▼▼▼▼▼▼▼▼▼▼▼▼▼▼▼▼▼▼▼

Measurement and adjustment:
- Hold the carburetor upside down.
- Measure the distance from the joint plane of the float chamber (without the gasket) and the top of the float.

NOTE:
The float arm must rest on the neeedle valve without being pressed.

- If the float height is out of tolerance, check the valve seat and the needle valve.
- If either is worn, replace both.
- If both are perfect, adjust the float height by bending the wing tab of the float itself (1).
- Recheck the float height.

▲▲▲▲▲▲▲▲▲▲▲▲▲▲▲▲▲▲▲▲▲▲▲▲▲▲▲▲▲▲▲▲

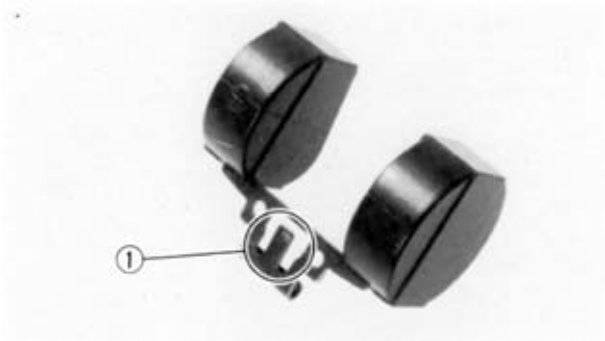

12. Install:
    - Float chamber

Screw (float chamber):
2 Nm (0.2 mkg)

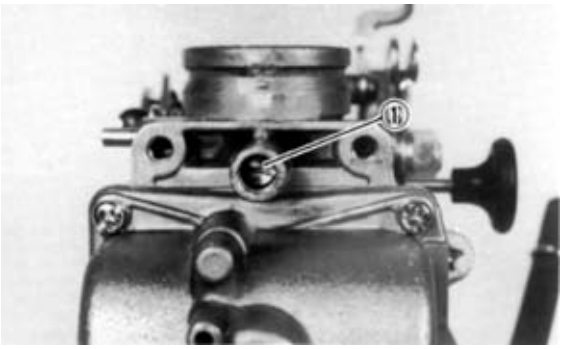

13. Adjust:
    - Pilot air screw (1)

▼▼▼▼▼▼▼▼▼▼▼▼▼▼▼▼▼▼▼▼▼▼▼▼▼▼▼▼▼▼▼▼

Adjustment:
- Turn the screw until it is slightly locked.
- Unscrew by 3 and 1/2 turns.

▲▲▲▲▲▲▲▲▲▲▲▲▲▲▲▲▲▲▲▲▲▲▲▲▲▲▲▲▲▲▲▲

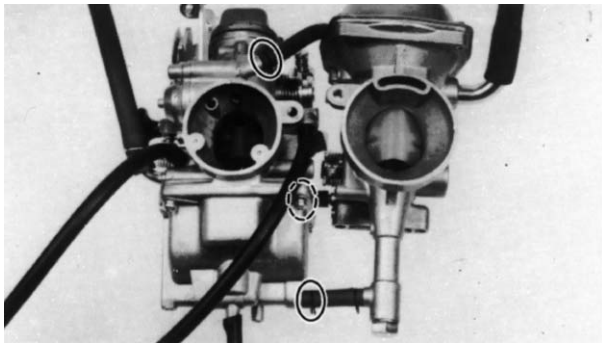

14. Install:
    - Primary carburetor
    - Secondary carburetor

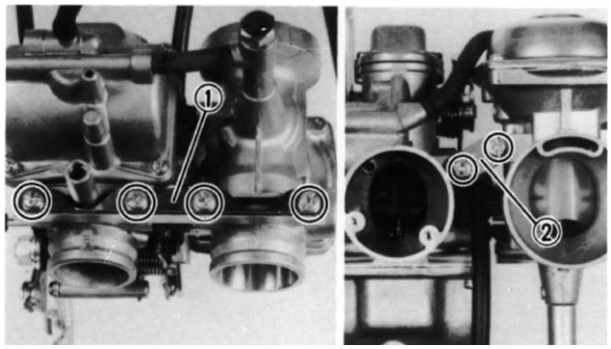

15. Install:
    - Support plate (front) (1)
    - Support plate (rear) (2)

	Screw (support plate): 3.5 Nm (0.35 mkg)

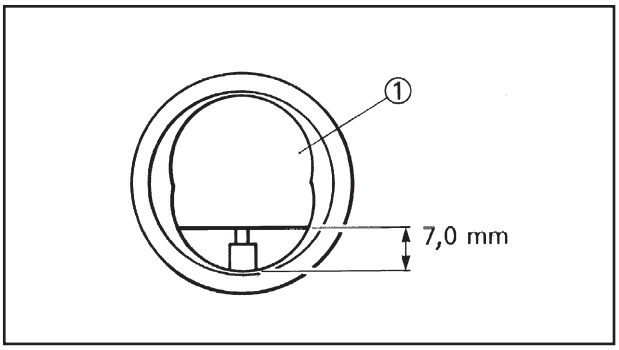

16. Adjust:
    - Synchronisation of secondary carburetor

▼▼▼▼▼▼▼▼▼▼▼▼▼▼▼▼▼▼▼▼▼▼▼▼▼▼▼▼▼▼▼▼

Adjustment:

- Move the primary throttle valve (1) to a height of 7.0 mm as shown in the figure.

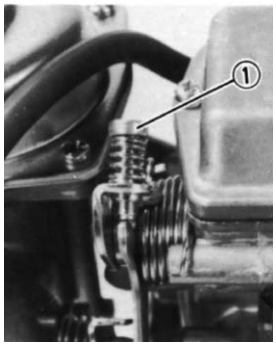

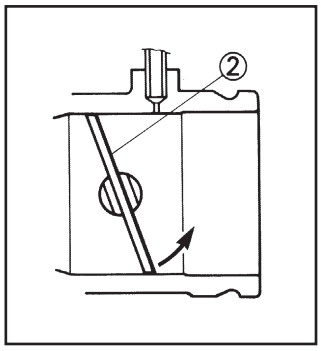

- Tighten or loosen the synchronisation screw (1) until the secondary throttle valve (2) starts to open.

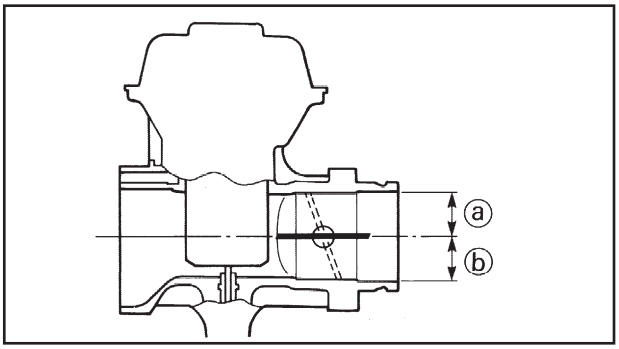

- Check that the secondary throttle valve is open horizontally (a)=(b) when the primary throttle valve is completely open

▲▲▲▲▲▲▲▲▲▲▲▲▲▲▲▲▲▲▲▲▲▲▲▲▲▲▲▲▲▲▲▲

FUEL LEVEL ADJUSTMENT (CARBURETOR INSTALLED

1. Place the motorcycle on a level surface.
2. Make sure that the carburetor is in a horizontal position by placing a hydraulic jack under the engine.

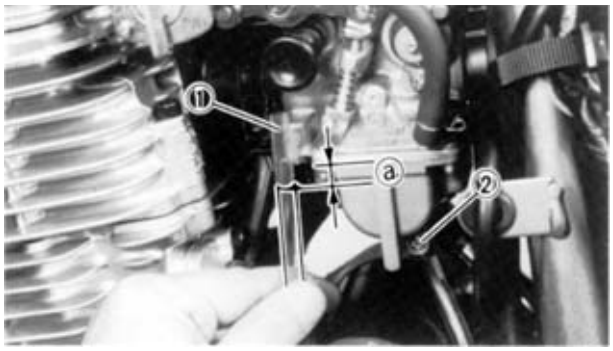

3. Connect the fuel level gauge (1) to the carburettor nipple.

	Fuel level gauge: **P/N. 90890-01312**

4. Loosen drain screw (2) and heat the engine.
5. Measure:
   - Fuel level (a)
     Out of specification → Adjust.

	Fuel level: **6.0 ~ 8.0 mm** **Under the edge of the carburetor body.**

6. Adjust:
   - Fuel level

▼▼▼▼▼▼▼▼▼▼▼▼▼▼▼▼▼▼▼▼▼▼▼▼▼▼▼▼▼▼▼▼▼▼

Fuel level adjustment:

- Remove carburetor assembly.
- Inspect valve seat and needle valve set.
- If either of the two is worn, replace both.
- If both are perfect, adjust float height by bending the wing tab of the float itself (1).
- Recheck the fuel level.

▲▲▲▲▲▲▲▲▲▲▲▲▲▲▲▲▲▲▲▲▲▲▲▲▲▲▲▲▲▲▲▲▲▲

ELEC 7

CHAPTER 7

ELECTRICAL

ELECTRICAL CIRCUIT DIAGRAM 7-1
COLOUR CODE 7-2

ELECTRICAL COMPONENTS 7-3

SWITCH CHECK 7-5
SWITCH CONNECTION 7-5
MAIN SWITCH INSPECTION 7-5

LIGHT INSPECTION (HEADLIGHTS, TAIL LIGHT AND BRAKE LIGHTS, DIRECTION INDICATOR LIGHTS, INSTRUMENT LIGHTS, ETC) 7-8
BULB TYPES 7-8
BULB INSPECTION 7-8

IGNITION SYSTEM 7-11
CIRCUIT DIAGRAM 7-11
DIAGNOSTICS 7-13

ELECTRICAL STARTING SYSTEM 7-21
CIRCUIT DIAGRAM 7-21
STARTING CIRCUIT OPERATION 7-23
DIAGNOSTICS 7-24
STARTER MOTOR 7-30

CHARGING SYSTEM 7-35
CIRCUIT DIAGRAM 7-35
DIAGNOSTICS 7-37

LIGHT SYSTEM 7-41
CIRCUIT DIAGRAM 7-41
DIAGNOSTICS 7-43
LIGHT SYSTEM INSPECTION 7-46

SIGNALLING SYSTEM 7-51
CIRCUIT DIAGRAM 7-51
DIAGNOSTICS 7-53
SIGNAL SYSTEM CONTROL 7-55

ELECTRICAL - ELECTRICAL CIRCUIT DIAGRAM

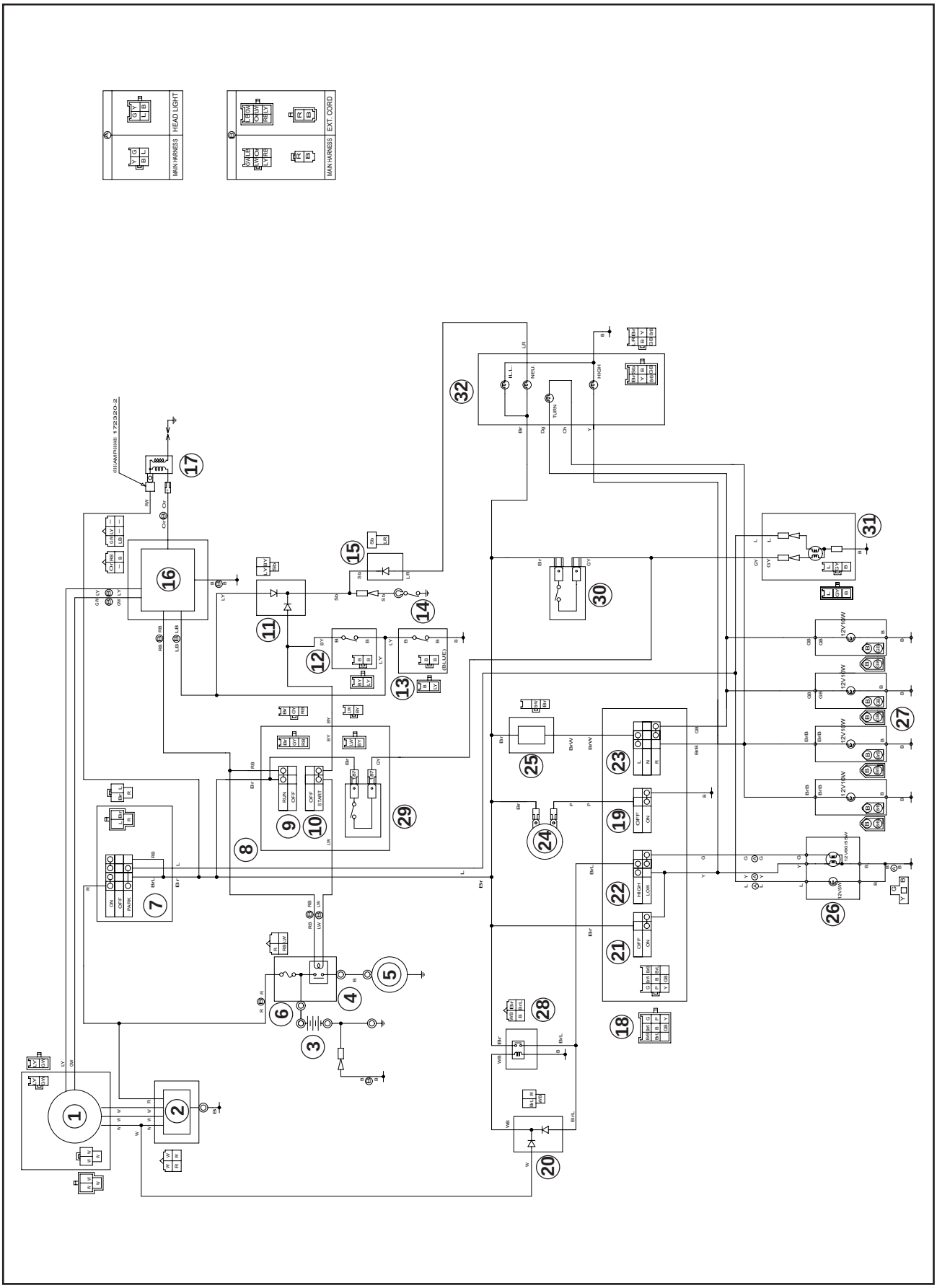

(1) AC generator/Pickup coil
(2) Rectifier/Regulator
(3) Battery
(4) Starter relay
(5) Starting motor
(6) Fuse
(7) Main switch
(8) Right handlebar switch
(9) Engine stop switch
(10) Starter switch
(11) Diode
(12) Clutch switch
(13) Sidestand switch
(14) Neutral switch
(15) Diode
(16) Ignitor unit
(17) Ignition coil
(18) Left handlebar switch
(19) Horn switch
(20) Diode
(21) Pass switch
(22) Dimmer switch
(23) Flasher switch
(24) Horn
(25) Flasher relay
(26) Headlight
(27) Flasher light
(28) Relay assy
(29) Front brake switch
(30) Rear brake switch
(31) Tail/stop light
(32) Meter

COLOUR CODE

B	Black	B/Y	Black/Yellow
Br	Brown	Br/B	Brown/Black
Ch	Chocolate	Br/W	Brown/White
Dg	Deep green	G/B	Green/Black
G	Green	G/R	Green/Red
Gy	Grey	G/W	Green/White
L	Blue	G/Y	Green/Yellow
Or	Orange	L/R	Blue/Red
P	Pink	L/W	Blue/White
R	Red	L/Y	Blue/Yellow
Sb	Sky-blue	R/B	Red/Black
W	White	R/W	Red/White
Y	Yellow	R/Y	Red/Yellow
B/R	Black/Red	W/L	White/Blue
B/W	Black/White	Y/R	Yellow/Red

ELECTRICAL COMPONENTS

BATTERY: CAPACITY 12V – 8Ah
SPECIFIC GRAVITY: 1.320

(1) Main wire harness
(2) Diodes
(3) Extension wire harness
(4) Rectifier/Regulator
(5) CDI ignition unit
(6) Battery (12V – 8Ah)
(7) Starter relay
(8) Fuse (20A)

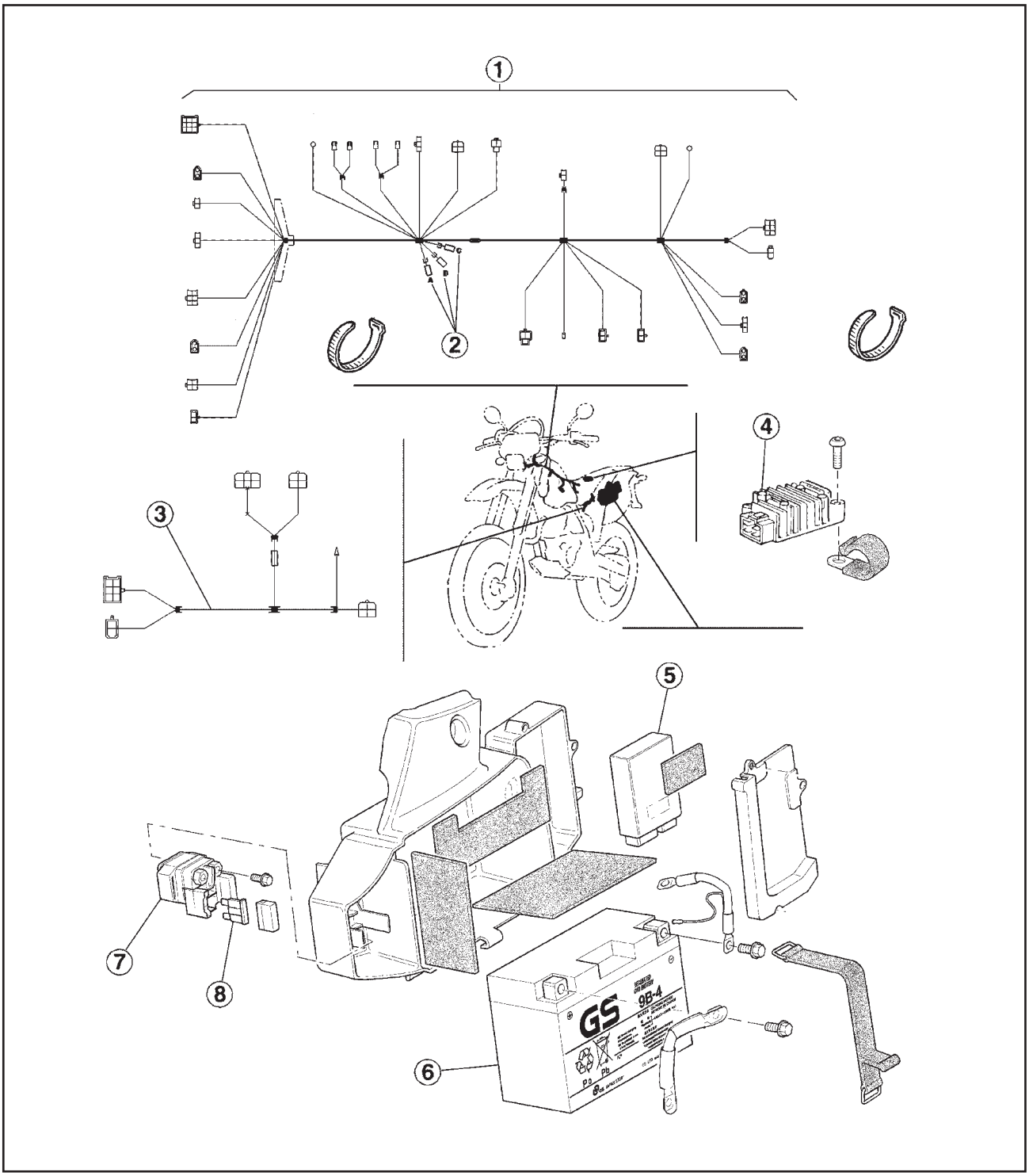

(1) Ignition coil
(2) Spark plug cap
(3) Flasher relay
(4) Horn
(5) Clutch switch
(6) Relay assy
(7) Sidestand switch
(8) Neutral switch
(9) Main switch

IGNITION COIL:

Primary winding resistance:
4 Ω ± 15% at 20°C (68°F)

Secondary winding resistance:
13 kΩ ± 20% at 20°C (68°F)

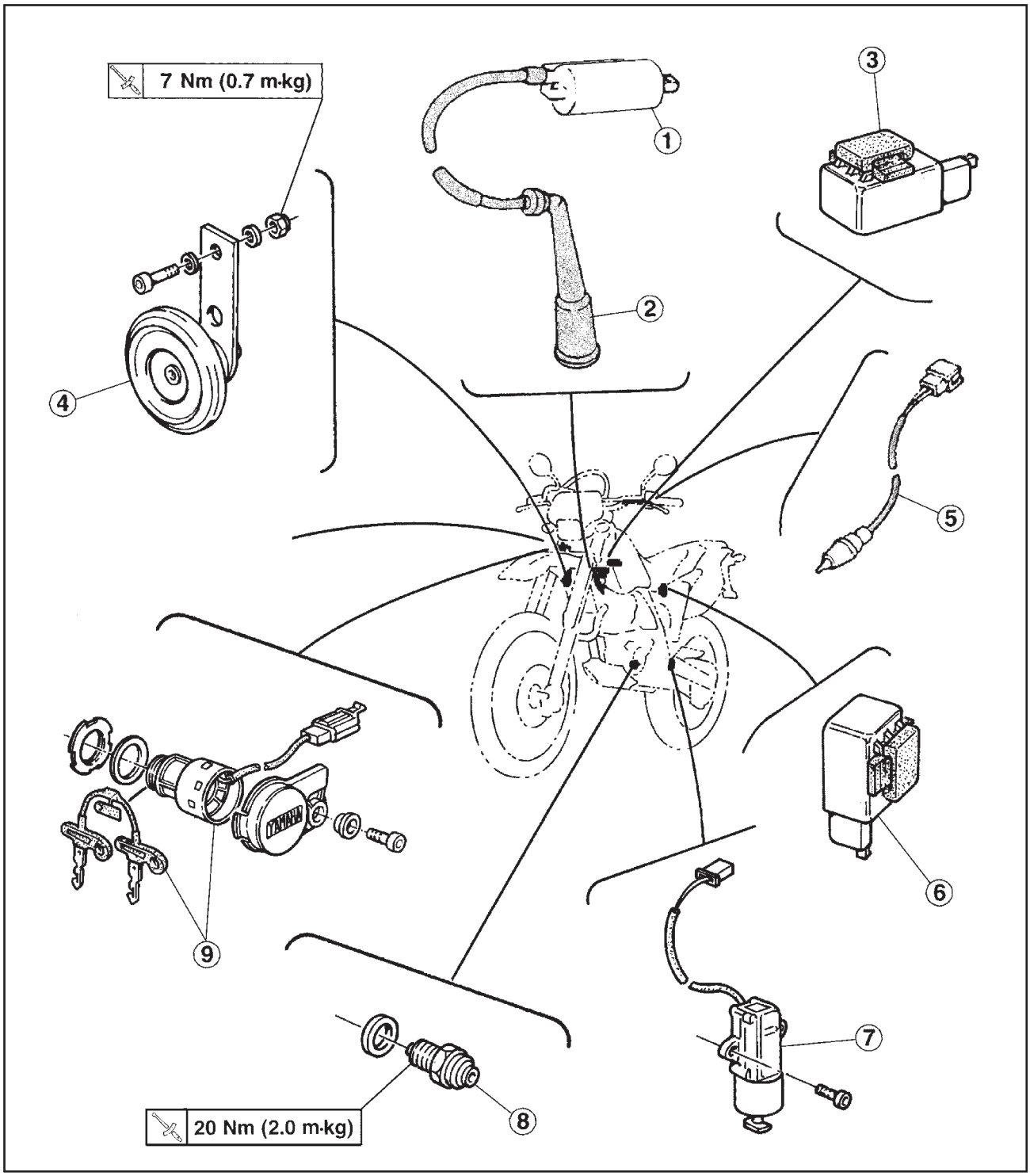

SWITCH CHECK

Check the continuity between the switch terminals to verify whether connections are correct.

To check the switch, read the following points.

SWITCH CONNECTION

The table shown here contains the connections between the switch terminals (eg main switch, handlebar switches, brake switch, light switch etc).

The column on the far left shows the positions of the main switch and the top line indicates the colours of the cables connected with the terminals of the switch itself.

“o——o” indicates the terminals between which there is electrical continuity, ie a closed circuit on the respective switch positions.

For example, in this table:

“R” and “Br” are continuous when the switch is at ON.

“L” and “R/B” are continuous when the switch is at ON.

“R” and “L” are continuous when the switch is at PARK.

Terminals are not continuous when the switch is at OFF.

	R	Br	L	R/B
ON	○—○		○—○	
OFF				
PARK	○———	———	———○	

MAIN SWITCH INSPECTION

Before inspecting the switch, see the connection table shown above and check the terminal connections (closed circuit) by the colour combination.

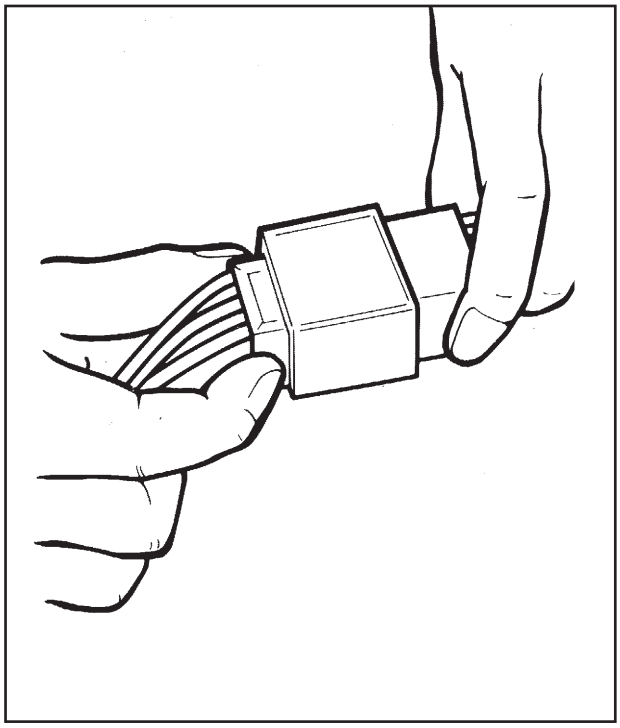

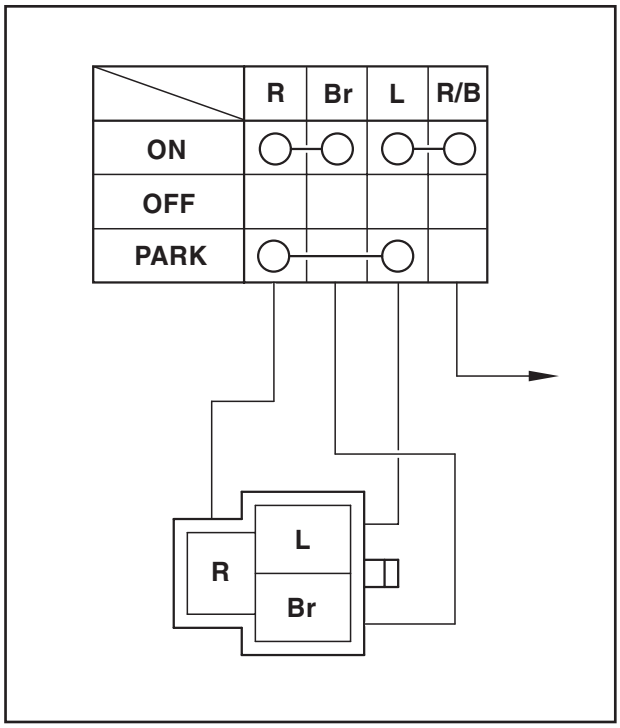

1. Detach the main switch connector from the harness connector.

CAUTION

When detaching the connector, do not pull by the cables. This way the cables might disconnect from the terminals inside the connector itself.

2. Check to see if any cables are disconnected from their terminal inside the connector. Reconnect, if necessary.

NOTE:

If the connector is blocked up with mud or dust, clean it with a jet of compressed air.

3. Use the connection table to check the combination of colours for continuity (closed circuit). In this example, continuity is as follows:
   "R" and "Br" are continuous when the switch is at ON.
   "L" and "R/B" are continuous when the switch is at ON.
   "R" and "L" are continuous when the switch is at PARK.
   Note that there is no continuity (open circuit) for any of the combinations of a colour different from those mentioned and when the switch is at OFF.

4. Check the switch component for continuity between "R" and "Br".

▼▼▼▼▼▼▼▼▼▼▼▼▼▼▼▼▼▼▼▼▼▼▼▼▼▼▼▼▼▼▼▼

Control procedure:

- Repeatedly shift the switch key to the various positions - ON, OFF and PARK.
- Shift the tester selector to "Ωx1".
- Connect the tester positive cable (+) to the terminal of cable "R" of the connector, and the negative cable (–) to cable terminal "Br".

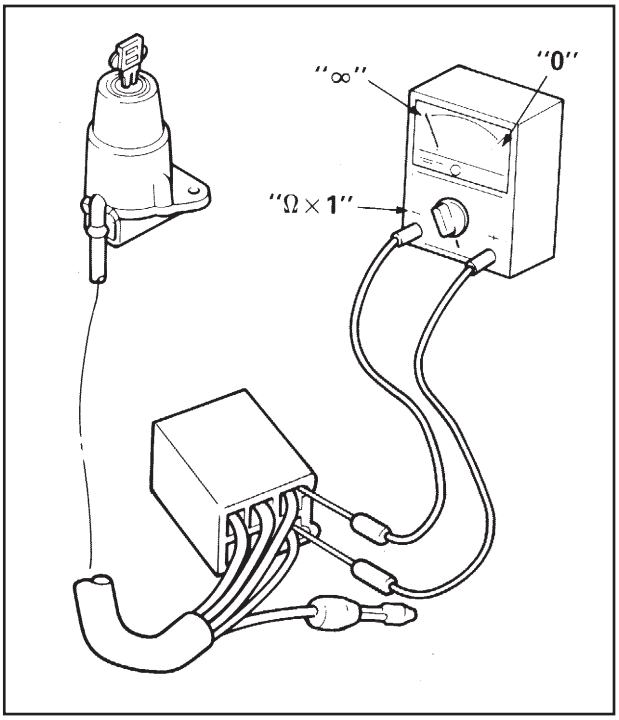

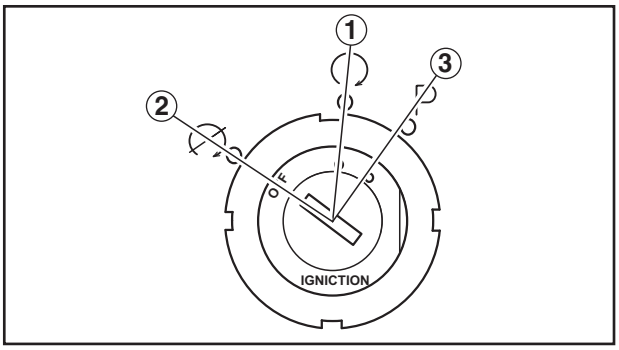

NOTE:

Use the thin tester terminals to check continuity, as the terminals might come into contact with others inside the connector.

- Check continuity between "R" and "Br" at switch positions ON (1), OFF (2) and PARK (3). There must be continuity (ie the tester must show "0") at ON and there must be no continuity (ie the tester must show "∞") at OFF and PARK. Something is not working between "R and Br" if there is no continuity between these two points at position ON, or if there is some continuity in one of the other positions OFF or PARK.

NOTE:

Check switch continuity various times.

▲▲▲▲▲▲▲▲▲▲▲▲▲▲▲▲▲▲▲▲▲▲▲▲▲▲▲▲▲▲▲▲

5. Continue to check continuity between "R" and "L" and "L" and "Br" in the respective switch positions in the manner described above.
6. If anything wrong is noted in any of the combinations, replace the switch component.

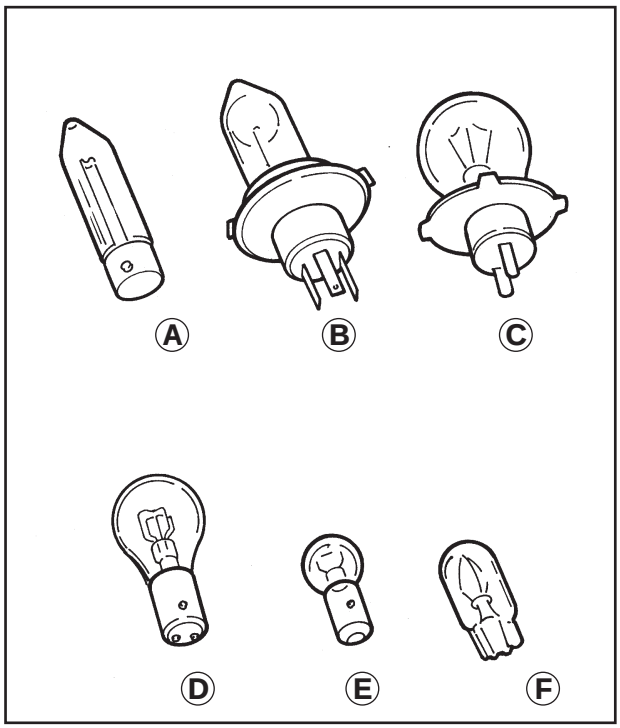

LIGHT INSPECTION (HEADLIGHTS, TAIL LIGHT AND BRAKE LIGHTS, DIRECTION INDICATOR LIGHTS, INSTRUMENT LIGHTS, ETC)

Check the continuity between the bulb terminals to see that they are undamaged.

BULB TYPES

The bulbs used are classified as shown to the left according to type of attachment.

(B) is H4 type halogen bulb (12V - 55/60W) and it is used for headlight.

CAUTION:

Avoid touching the glass part of a bulb. Keep it free from oil; otherwise, the transparency of the glass, life of the bulb, and luminous flux will be adversely affected. If oil gets on a bulb, thoroughly clean it with a cloth moistened with alcohol or lacquer thinner.

(A) and (C) are used mainly for headlights.

(D) is used mainly for direction indicator lights and the rear and braking lights.

(E) and (F) are used especially for instrument and other indication lights.

BULB INSPECTION

1. Remove the bulb.

NOTE:

- Bulbs of type (B) and (C) use special supports (bulbholders). Remove the bulbholder before removing the bulb. Most of these bulbholders may be removed by turning in an anticlockwise direction.
- Most bulbs of type (A), (D) and (E) may be removed from their housing by pushing them and turning them in an anticlockwise direction.
- Bulbs of type (F) may be removed simply by pulling them out.

CAUTION:

When removing a bulb be careful to hold the bulbholder or its housing firmly. Never pull the cable, as it might detach from the terminal inside the connector.

WARNING

Keep inflammable products and hands well away from bulbs when they are on (danger of burns and fire). Do not touch the bulb before it is cool.

2. Check the continuity between the bulb terminals.

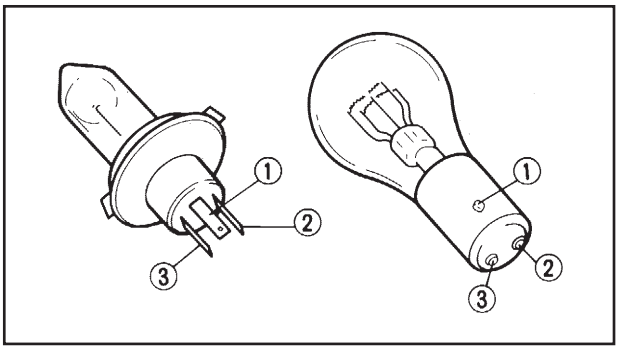

▼▼▼▼▼▼▼▼▼▼▼▼▼▼▼▼▼▼▼▼▼▼▼▼▼▼▼▼▼▼▼▼

Control procedure:

- Set the tester selector to Ω x 1”.
- Connect the tester terminals to the bulb pins. Take, for example, a three pin bulb as shown in the figure. First check continuity between pins (1) and (2), connecting tester terminal (+) to pin (1) and terminal (–) to pole (2). Then check the continuity between poles (1) and (3), again connecting tester terminal (+) to pole (1), and terminal (–) to pole (3). If the tester indicates “∞”, even in one case only, the bulb must be replaced.

▲▲▲▲▲▲▲▲▲▲▲▲▲▲▲▲▲▲▲▲▲▲▲▲▲▲▲▲▲▲▲▲

3. . Check the bulb attachment by installing a test bulb. Furthermore, during inspection of the bulbs, connect the tester terminals to the respective socket cables and check continuity as described.

IGNITION SYSTEM - CIRCUIT DIAGRAM

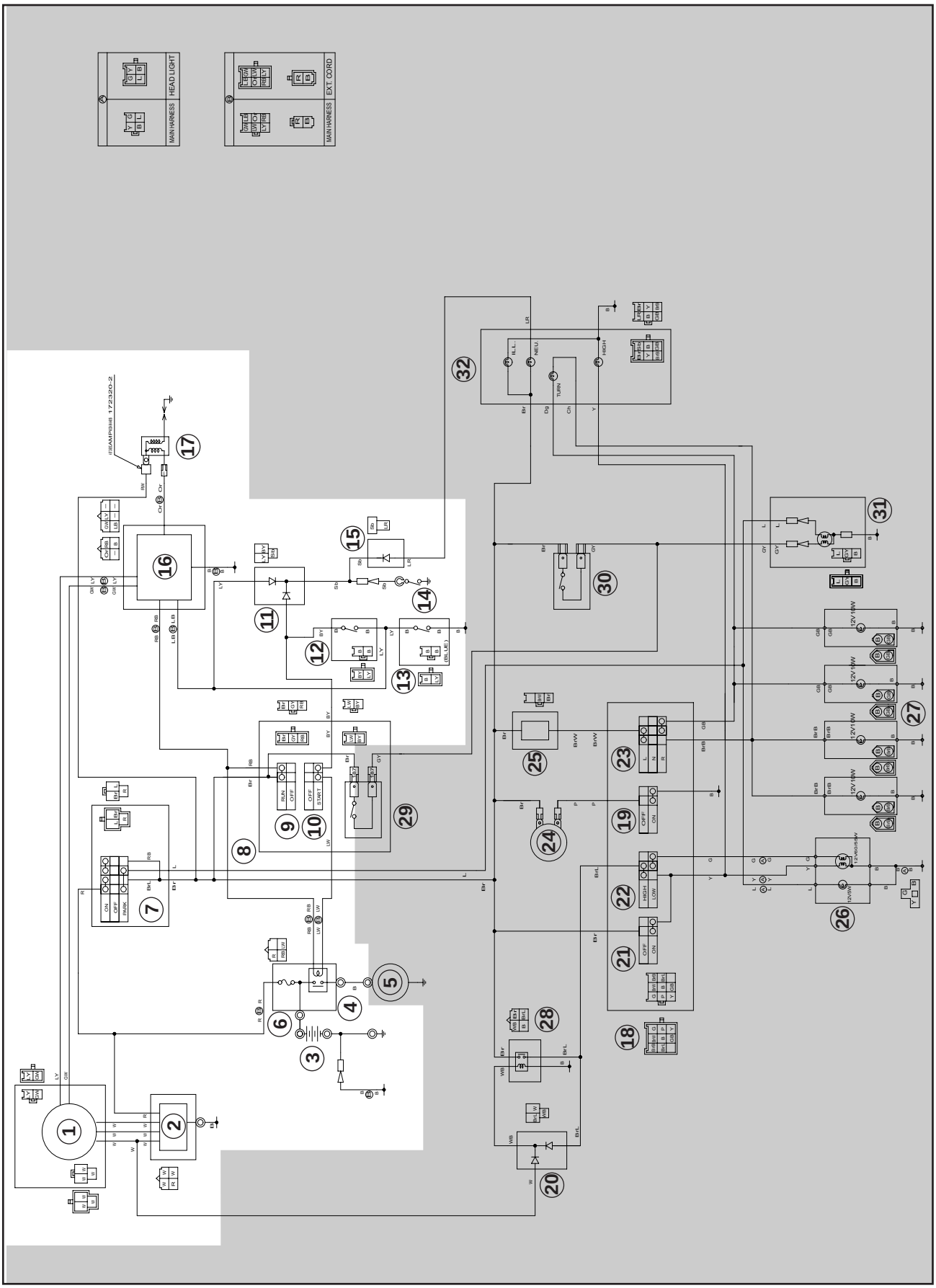

The diagram illustrates the ignition circuit inside the motorcycles electric system.

NOTE:
For the colour code and legend, see page 7-2.

(1) AC generator/Pickup coil
(2) Rectifier/Regulator
(3) Battery
(6) Fuse
(7) Main switch
(9) Engine stop switch
(11) Diode
(12) Clutch switch
(13) Sidestand switch
(14) Neutral switch
(15) Diode
(16) Ignitor unit
(17) Ignition coil

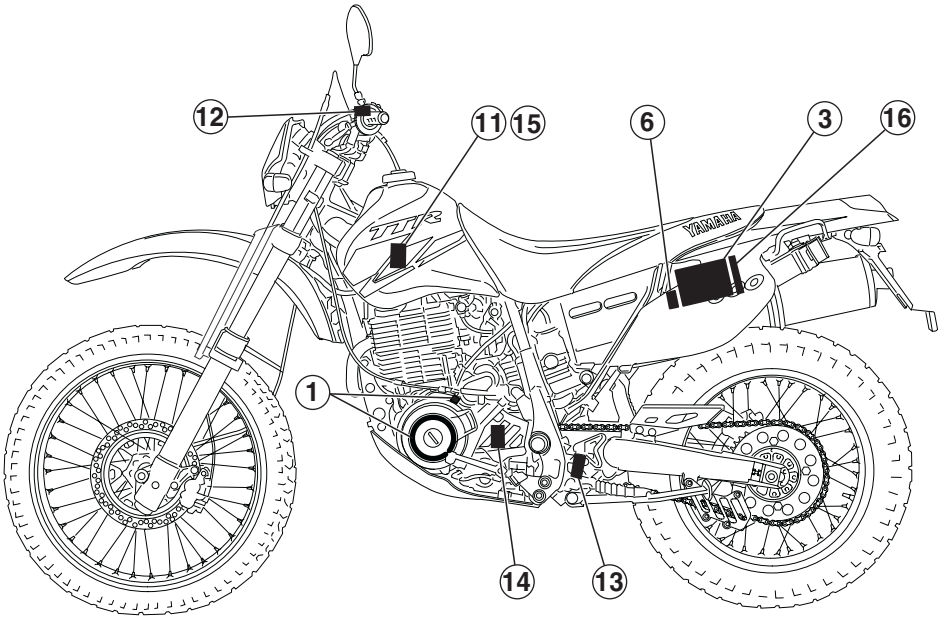

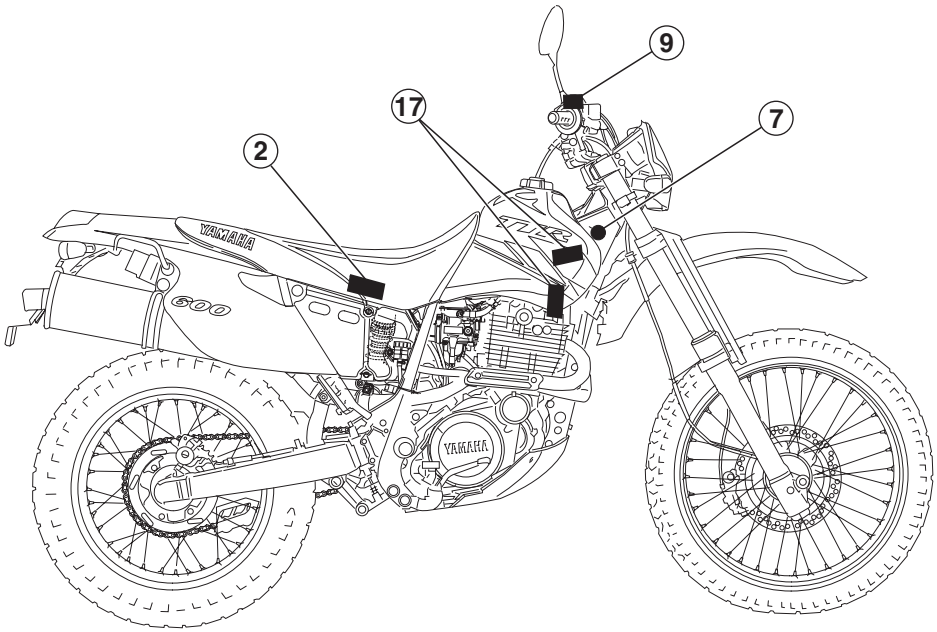

DIAGNOSTICS

IF THE IGNITION SYSTEM WERE TO STOP WORKING (NO OR INTERMITTENT SPARK)

Procedure

Check:

1. Fuse
2. Battery
3. Spark plug
4. Amplitude of ignition spark
5. Spark plug cap resistance
6. Ignition winding resistance
7. Main switch
8. Engine stop switch
9. Sidestand switch
10. Neutral switch
11. Clutch switch
12. Pick-up coil resistance
13. Wiring connections (whole connection system)

NOTE:

Before making the inspections mentioned, remove the following parts:

1. Seat
2. Rear cowling
3. Fuel tank
4. Cowling (headlight)

- To check functioning defects use the following special tools.

Dinamic spark tester: **P/N. 90890-06754**	**Pocket tester:** **P/N. 90890-03112**

1. Fuse

- Check the fuse for continuity. Refer to “CHECKING THE FUSES” in Chapter 3.
- Is the fuse OK?

NO → Replace the fuse.

YES ↓

2. Battery

- Check the condition of the battery. Refer to “CHECKING AND CHARGING THE BATTERY” in Chapter 3.

Min. open-circuit voltage:
2.8 V or more at 20°C (68°F)

- Is the battery OK?

NO →
- Clean the battery terminals.
- Recharge or replace the battery.

YES ↓

*

*

3. Spark plug.

- Check the conditions of the spark plug.
- Check the type of spark plug used.
- Check the electrodes gap.

Standard spark plug:
DPR8EA-9 (NGK), DPR9EA-9

Electrodes gap:
DPR8EA-9, DPR9EA-9 (NGK)
0.8 ~ 0.9 mm

OUT OF SPECIFICATION

Correct the electrodes gap or replace the spark plug.

YES

4. Amplitude of the ignition spark.

- Detach the spark plug cap from the spark plug.
- Connect the dynamic spark tester (1) as shown in the figure.
  (2) Spark plug cover (3) Spark plug
- Turn the main switch ON.

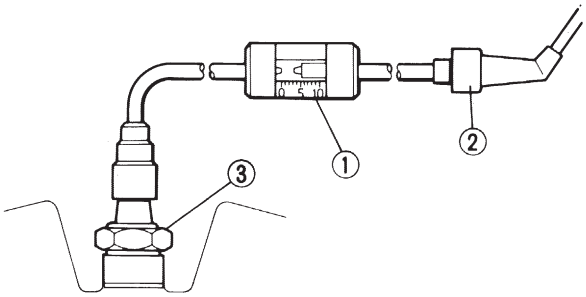

- Check the amplitude of the ignition spark.
- Start the engine and increase the amplitude until the ignition becomes discontinuous.

Spark amplitude if the ignition system is efficient:
6.0 mm

IN COMPLIANCE WITH SPECIFICATIONS

Minimum spark amplitude.

THE IGNITION SYSTEM IS INEFFICIENT OR THERE IS NO SPARK

*

*

5. Spark plug cap resistance.
• Remove the spark plug cap. • Connect the pocket tester (Ω x 1k) to the spark plug cap.
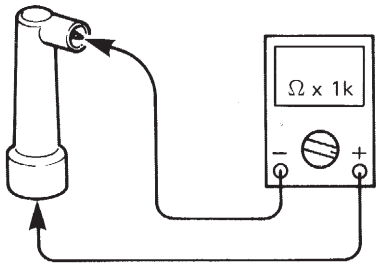
• Check that the spark plug cap has the specified resistance.
Resistance of spark plug cap: **10 kΩ at 20°C (68°F)**

OUT OF SPECIFICATION

The spark plug cap is defective.
Replace.

IN COMPLIANCE
WITH SPECIFICATIONS

6. Ignition winding resistance.
• Disconnect the ignition coil cables from the wire harness. • Connect the pocket tester (Ω x 1) to the ignition coil.
Tester terminal (+) → Pole (+) **Tester terminal (–) → Pole (–)**
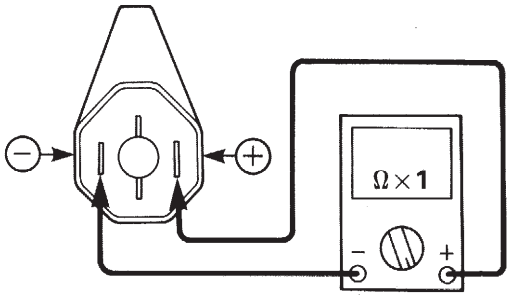
• Check that the primary coil has the specified resistance.

Primary winding resistance:
4 Ω ± 15% at 20°C (68°F)
(Terminal (+) – Terminal (–))

- Connect the pocket tester (Ω x 1) to the ignition coil.

Tester terminal (+) → Spark plug cable (1)
Tester terminal (–) → Pole (+)

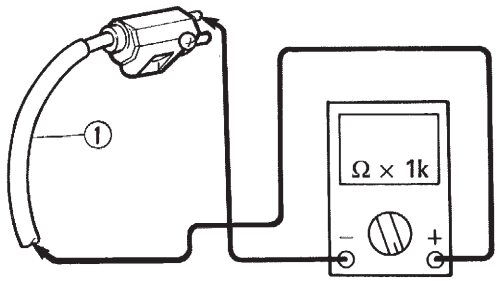

- Check that the secondary coil has the specified resistance

Secondary winding resistance:
13 kΩ ± 20% at 20°C (68°F)
(Spark plug cable – Terminal (–))

OUT OF SPECIFICATION

The ignition coil is defective.
Replace.

BOTH RESISTANCE VALUES ARE CORRECT

7. Main switch.

- Disconnect the main switch connector from the wire harness.
- Connect the pocket tester (Ω x 1) to the main switch cables.
  Refer to “SWITCH CHECK” in Chapter 3.

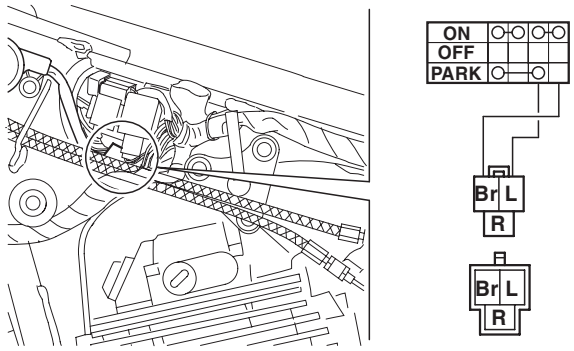

INCORRECT

The main switch is defective. Replace.

CORRECT

*

*

8. Emergency stop engine switch.

- Disconnect the emergency stop engine switch connector (Brown, Green/Yellow and Red/Black) from the wire harness.
- Connect the pocket tester (Ω x 1) to the switch cables.
  Refer to “SWITCH CHECK” in Chapter 3.

Tester terminal (+) → Red/Black (1) cable
Tester terminal (–) → Brown cable (2)

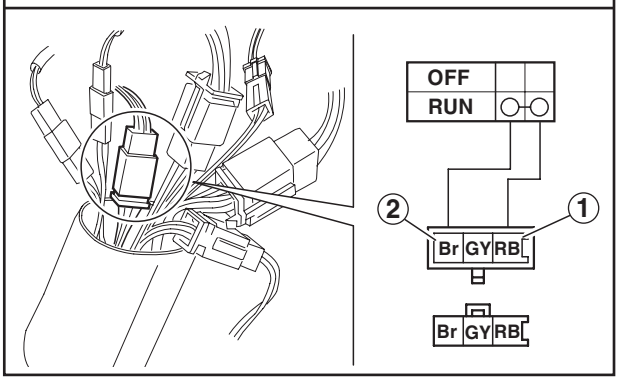

INCORRECT

The emergency stop engine switch is defective. Replace the right handlebar switch.

CORRECT

9. Sidestand switch.

- Disconnect the sidestand switch connector (Black and Black) from the wire harness.
- Connect the pocket tester (Ω x 1) to the sidestand switch cables.
  Refer to “SWITCH CHECK” in Chapter 3.

Tester terminal (+) → Black cable (1)
Tester terminal (–) → Black cable (2)

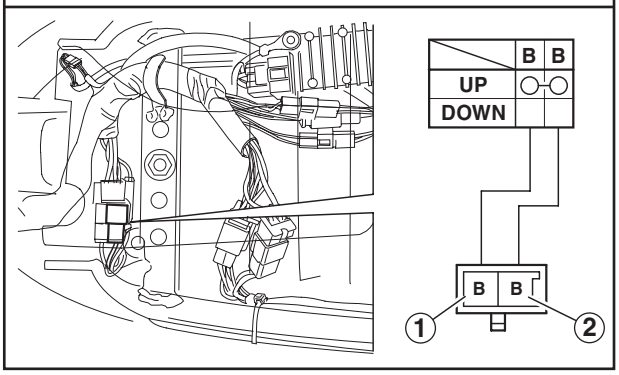

INCORRECT

The sidestand switch is defective. Replace.

CORRECT

*

*

10. Neutral switch.

- Disconnect the neutral switch cable (Sky blue).
- Connect the pocket tester (Ω x 1) to the neutral switch cables.
  Refer to “SWITCH CHECK” in Chapter 3.

Tester terminal (+) → Sky blue cable (1)
Tester terminal (–) → Earth

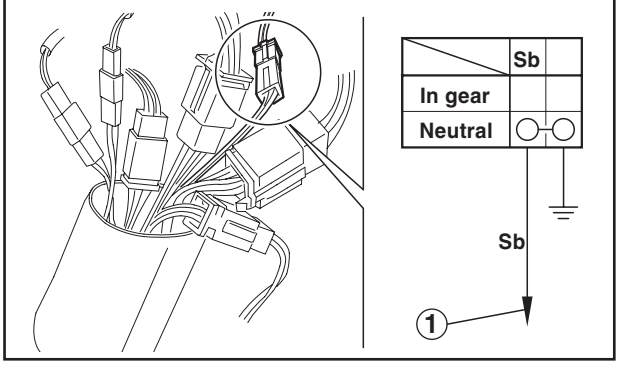

INCORRECT

The neutral switch is defective. Replace.

CORRECT

11. Clutch switch.

- Disconnect the clutch switch connector from the harness.
- Connect the pocket tester (Ω x 1) to the clutch switch cable.
- Check the clutch switch component for continuity between “Black (1)” and “Black (2)”.
  Refer to “SWITCH CHECK” in Chapter 3.

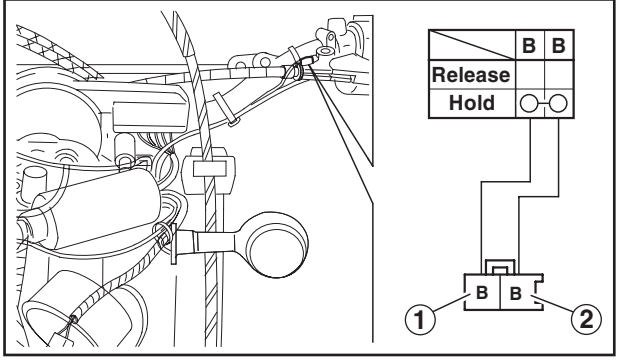

INCORRECT

The clutch switch is defective. Replace.

CORRECT

*

*

12. Pick-up coil resistance.

- Disconnect the generator connector (Green/White and Blue/Yellow).
- Connect the pocket tester (Ω x 100) to pick-up coil cables.

Tester terminal (+) →
Blue/Yellow cable (1)
Tester terminal (–) →
Green/White cable (2)

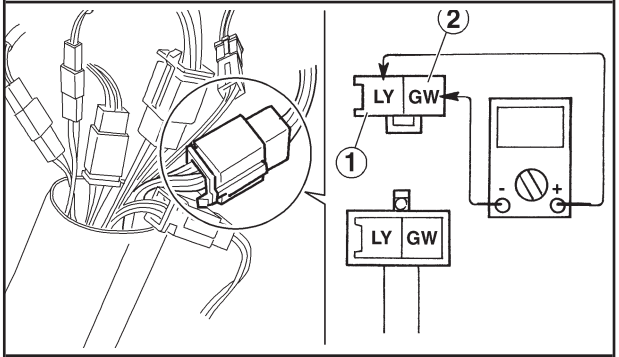

- Check that the pick-up coil resistance is as specified.

Pick-up coil resistance:
230 Ω ± 20% at 20°C (68°F)
(Green/White - Blue/Yellow)

OUT OF SPECIFICATIONS

The pick-up coil is defective. Replace.

COMPLY WITH SPECIFICATIONS

13. Wiring connections.

Check the connections of the entire ignition system. Refer to “ELECTRICAL CIRCUIT DIAGRAM” section.

UNCERTAIN CONNECTIONS

Correct.

CORRECT

The CDI unit is defective. Replace.

ELECTRICAL STARTING SYSTEM - CIRCUIT DIAGRAM

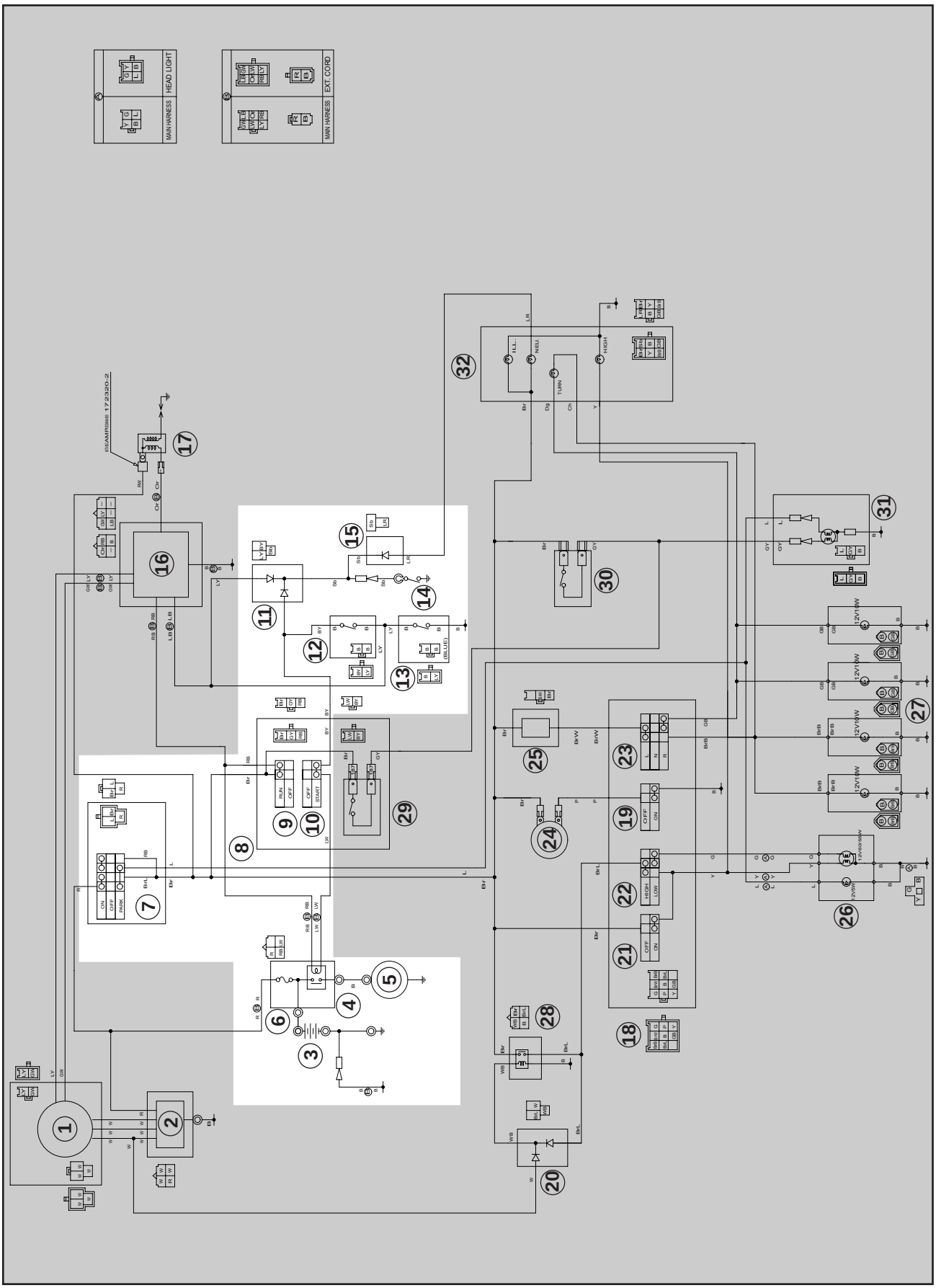

The diagram illustrates the electrical starting system-circuit inside the motorcycles electric system.

NOTE:

For the colour code and legend, see page 7-2.

(3) Battery
(4) Starter relay
(5) Starting motor
(6) Fuse
(7) Main switch
(9) Engine stop switch
(10) Starter switch
(11) Diode
(12) Clutch switch
(13) Sidestand switch
(14) Neutral switch
(15) Diode

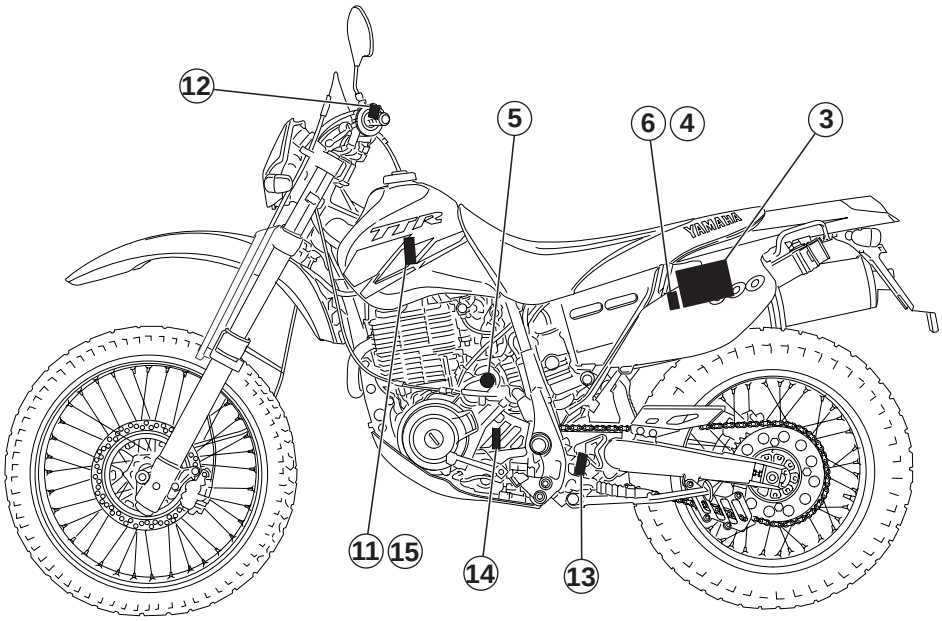

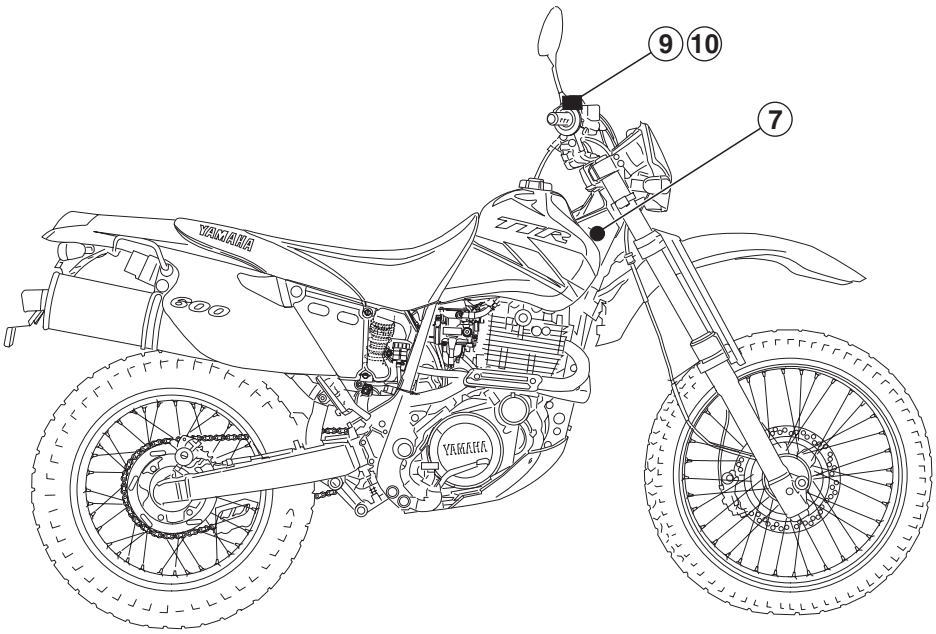

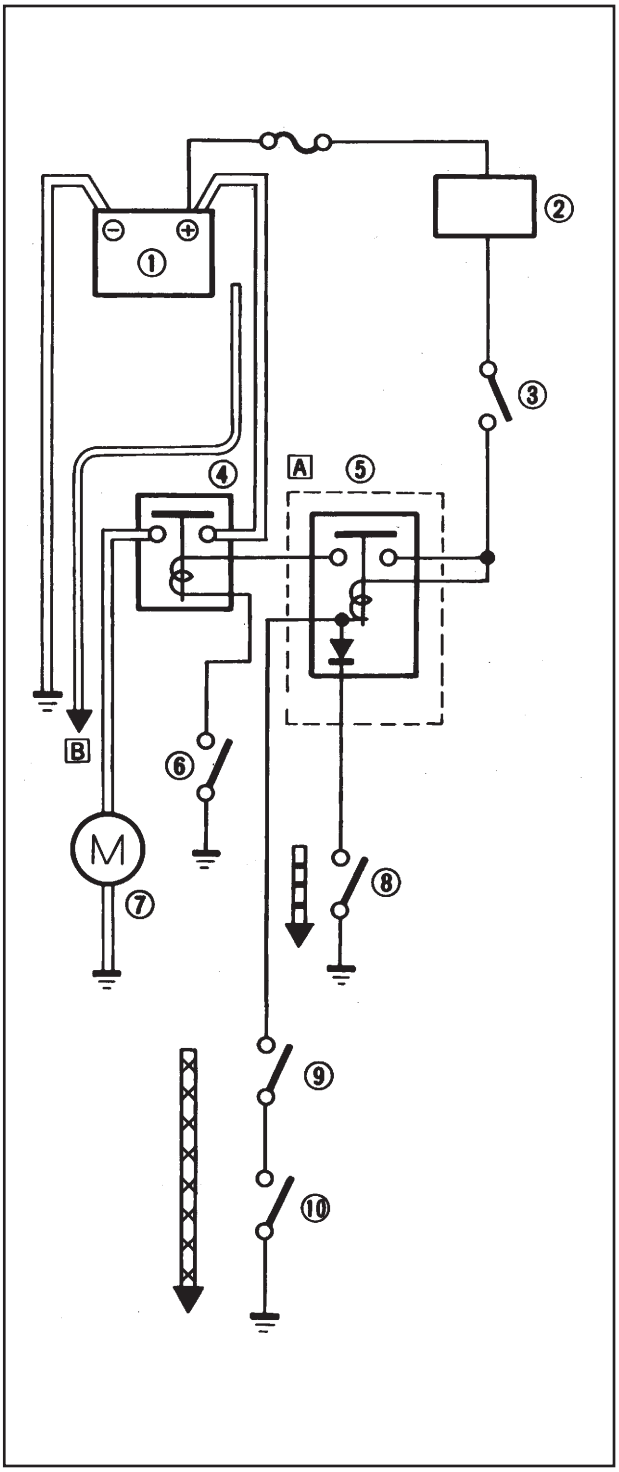

STARTING CIRCUIT OPERATION

The starting circuit on this model consists of the starter motor, starter relay, and the starting circuit cut-off relay. If the engine stop switch is on “RUN” and the main switch is on “ON” (both switches are closed), the starter motor can operate only if:

> The transmission is in neutral (the neutral switch is closed).
>
> **or if**
>
> The clutch lever is pulled to the handlebar (the clutch switch is closed) and the sidestand is up (the sidestand switch is closed).

The starting circuit cut-off relay prevents the starter from operating when neither of these conditions have been met. In this instance, the starting circuit cut-off relay is open so current cannot reach the starter motor.

When at least one of the above conditions have been met however, the starting circuit cut-off relay is closed, and the engine can be started by pressing the starter switch.

WHEN THE TRANSMISSION IS IN NEUTRAL

WHEN THE SIDESTAND IS UP AND THE CLUTCH LEVER IS PULLED IN

① Battery
② Main switch
③ Engine stop switch
④ Starter relay
⑤ Starting circuit cut-off relay
⑥ Start switch
⑦ Starter motor
⑧ Neutral switch
⑨ Clutch switch
⑩ Sidestand switch

DIAGNOSTICS

THE STARTER FAILS TO WORK

Procedure
Inspect:
(1) Fuse
(2) Battery
(3) Starting motor
(4) Starter relay
(5) Main switch
(6) Engine stop switch
(7) Sidestand switch
(8) Neutral switch
(9) Clutch switch
(10) Starter switch
(11) Harness connections

NOTE:
Before starting inspections, remove the following parts:

1. Seat
2. Rear cowling
3. Fuel tank
4. Cowling (headlight)

- To check for defects use the following special tools.

Pocket tester:
P/N. 90890-03112

1. Fuse.
- Remove fuse.
- Connect the pocket tester (Ω x 1) to the fuse.
- Check the fuse for continuity.
  Refer to “CHECKING THE FUSES” in Chapter 3.

DISCONTINUTY → Replace the fuse.

CONTINUITY ↓

2. Battery.
- Check the condition of the battery.
  Refer to “CHECKING AND CHARGING THE BATTERY” in Chapter 3.

Min. open-circuit voltage:
12.8 V or more at 20°C (68°F)

INCORRECT →
- Clean the battery terminals.
- Recharge or replace the battery.
  Refer to “BATTERY INSPECTION” in Chapter 3.

CORRECT ↓

*

*

3. Starter

- Connect the positive terminal of the battery (1) and the starter cable (2) using a connection cable (3) *.

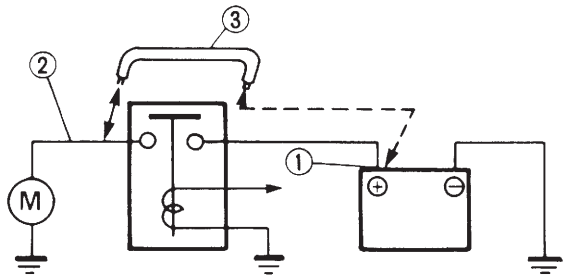

- Check the functioning of the starter.

*

⚠ WARNING

- **A wire that is used as a jumper lead must have at least the same capacity of the battery lead, otherwise the jumper lead may burn.**
- **This check is likely to produce sparks, therefore make sure that no flammable gas or fluid is in the vicinity.**

IT FAILS TO RUN

The starter is defective. Repair or replace.

IT RUNS

4. Starter relay.

- Disconnect the starter relay connector.
- Connect the battery and frame to the starter relay connector, using a connection cable (1) as shown.

Battery terminal (+) (2) → Red/Black terminal (3)
Frame → Blue/White terminal (4)

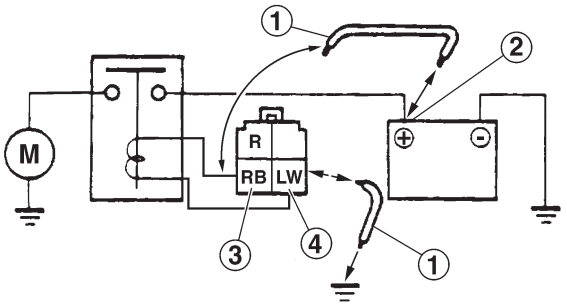

- Check the functioning of the starter.

IT FAILS TO RUN

The starter relay is defective. Replace.

IT RUNS

*

*

5. Main switch
• Disconnect the main switch connector from the wire harness. • Connect the pocket tester (Ω x 1) to the main switch cables. Refer to “SWITCH CHECK” in Chapter 3.
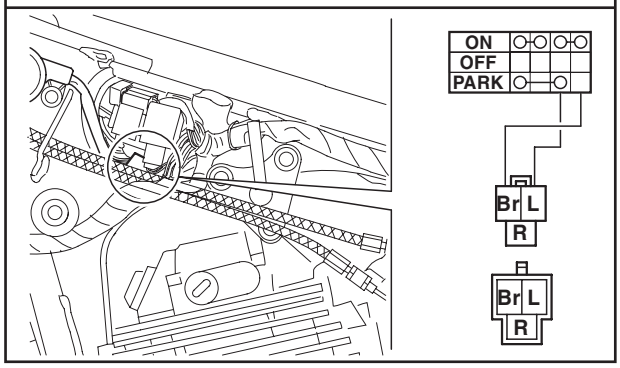

INCORRECT

The main switch is defective. Replace.

CORRECT

6. Emergency stop engine switch.
• Disconnect the emergency stop engine switch connector (Brown, Green/Yellow and Red/Black) from the wire harness. • Connect the pocket tester (Ω x 1) to the switch cables. Refer to “SWITCH CHECK” in Chapter 3.
Tester terminal (+) → Red/Black (1) cable **Tester terminal (–) → Brown cable (2)**
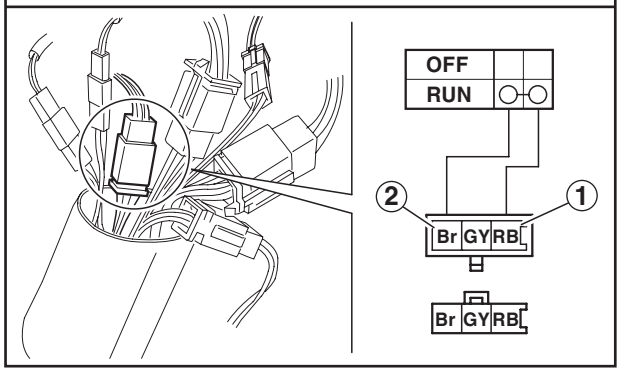

INCORRECT

The emergency stop engine switch is defective. Replace the right handlebar switch.

CORRECT

*

*

7. Sidestand switch.
• Disconnect the sidestand switch connector (Black and Black) from the wire harness. • Connect the pocket tester (Ω x 1) to the sidestand switch cables. Refer to “SWITCH CHECK” in Chapter 3.
Tester terminal (+) → Black cable (1) **Tester terminal (–) → Black cable (2)**
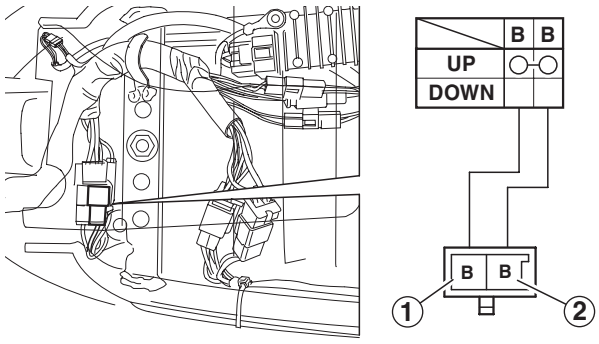

INCORRECT

The sidestand switch is defective. Replace.

CORRECT

8. Neutral switch.
• Disconnect the neutral switch cable (Sky blue). • Connect the pocket tester (Ω x 1) to the neutral switch cables. Refer to “SWITCH CHECK” in Chapter 3.
Tester terminal (+) → Sky blue cable (1) **Tester terminal (–) → Earth**
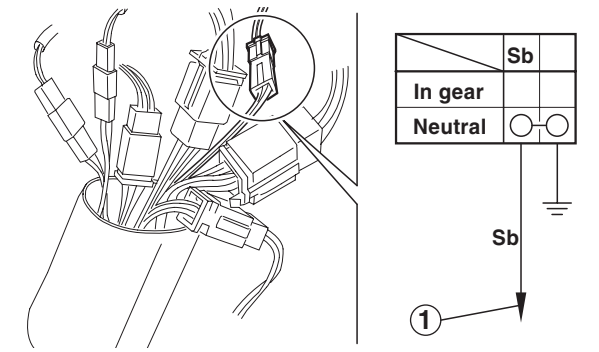

INCORRECT

The neutral switch is defective. Replace.

CORRECT

*

*

9. Clutch switch.

- Disconnect the clutch switch connector from the harness.
- Connect the pocket tester (Ω x 1) to the clutch switch cable.
- Check the clutch switch component for continuity between “Black (1)” and “Black (2)”.

  Refer to “SWITCH CHECK” in Chapter 3.

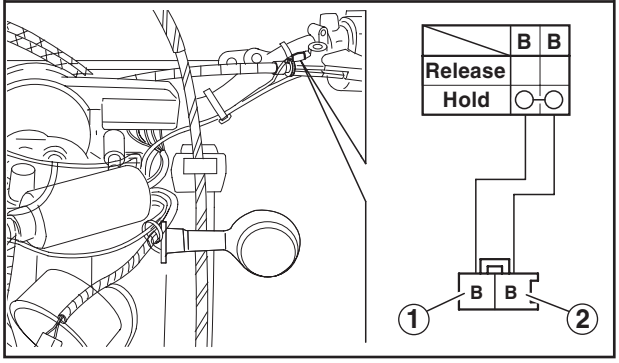

INCORRECT

The clutch switch is defective. Replace.

CORRECT

10. Start switch.

- Disconnect the start switch connector from the harness.
- Connect the pocket tester (Ω x 1) to the handlebar switch terminal.
- Check the start switch component for continuity between “Blue/White (1)” and “Black/Yellow (2)”.

  Refer to “SWITCH CHECK” in Chapter 3.

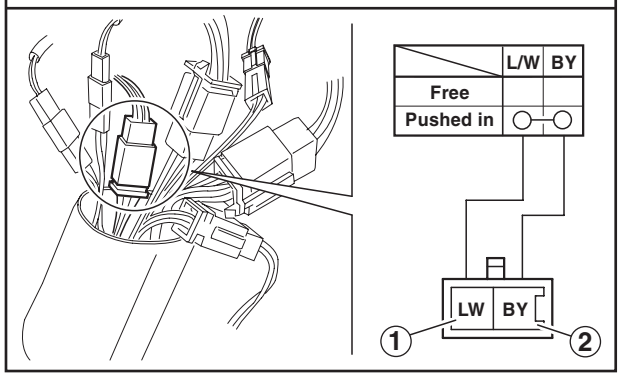

INCORRECT

The start switch is defective. Replace the right handlebar switch.

CORRECT

*

*

11. Harness connections.
Check the connections of the entire starter system. See the “ELECTRIC CIRCUIT DIAGRAM”.

UNCERTAIN CONNECTIONS

Correct.

STARTER MOTOR

(1) Brushes
(2) Armature
(3) Stator
(4) O-Ring

BRUSH LENGHT LIMIT
5 mm (0.20 in)

COMMUTATOR WEAR LIMIT:
27 mm (1.06 in)

MICA UNDERCUT:
0.7 mm (0.027 in)

ARMATURE COIL RESISTANCE:
0.03 ~ 0.04 Ω at 20°C (68°F)

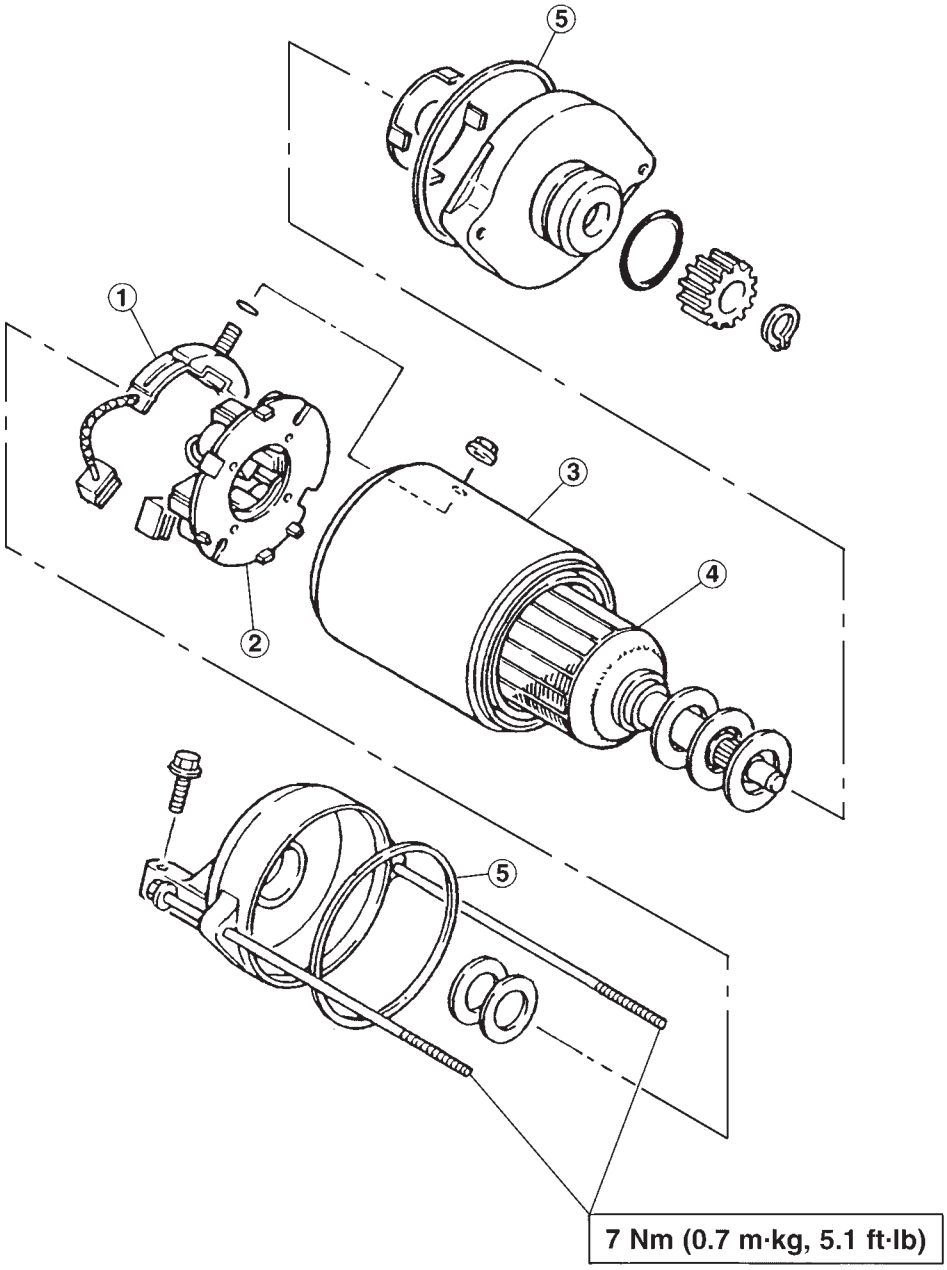

Removal

1. Remove:
   - The starter motor
     Refer to the “ENGINE REMOVAL” section in CHAPTER 5.

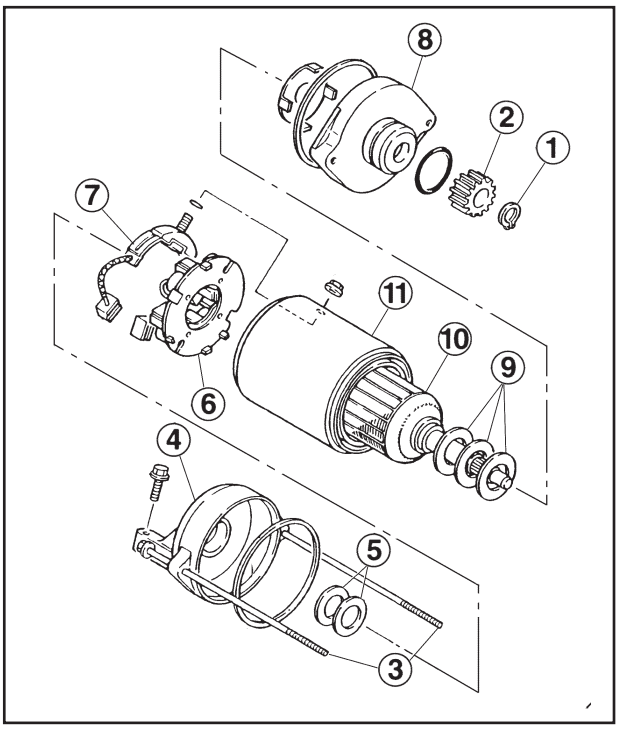

Disassembly

1. Remove:
   - Circlip (1)
   - Drive gear (2)
   - Screws (3)
   - Rear bracket (4)
   - Washers (5)
   - Brushes housing (6)
   - Brushes (7)
   - Front bracket (8)
   - Washers (9)
   - Armature (10)
   - Stator (11)

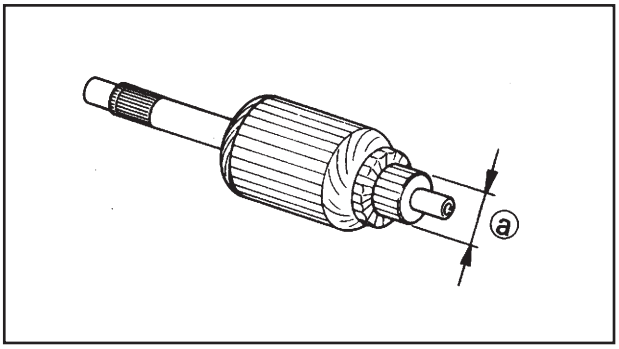

Inspection and repair

1. Inspect:
   - Manifold
     Dirty → Clean with sandpaper no. 600.
2. Measure:
   - Diameter of the commutator
     Out of specification → Replace the motor.

	Wear limit of commutator (a): **27 mm**

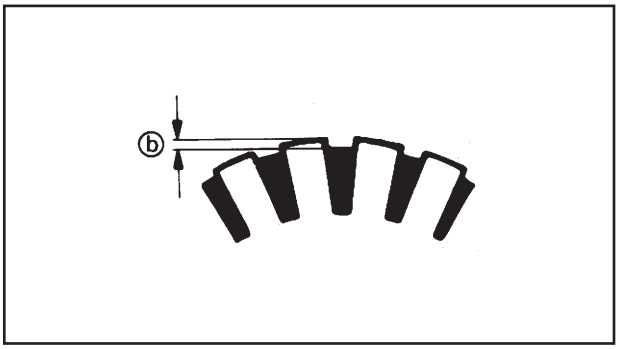

3. Measure:
   - The mica undercut (b).
     Out of specification → Level the undercut to the correct value using a hacksaw.

	Mica undercut (b): **0.7 mm**

NOTE:

The mica insulation of the commutator must have an undercut to ensure proper functioning of the commutator.

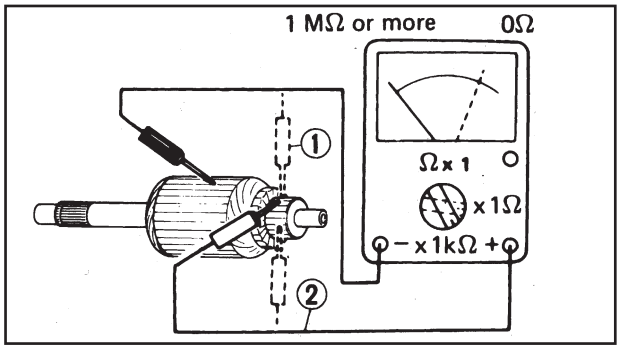

4. Inspect:
   - Armature coils (insulation/continuity).
     Out of specification → Replace the motor.

▼▼▼▼▼▼▼▼▼▼▼▼▼▼▼▼▼▼▼▼▼▼▼▼▼▼▼▼▼▼▼▼

How to inspect the excitation coils:

- Connect the pocket tester and check continuity (1) and insulation (2).
- Check the armature resistance:

Armature coil resistance:
Continuity check (1):
0 Ω at 20°C (68°F)
Insulation check (2):
Over 1 MΩ at 20°C (68°F)

- If the resistance is not correct, replace the starter motor.

▲▲▲▲▲▲▲▲▲▲▲▲▲▲▲▲▲▲▲▲▲▲▲▲▲▲▲▲▲▲▲▲

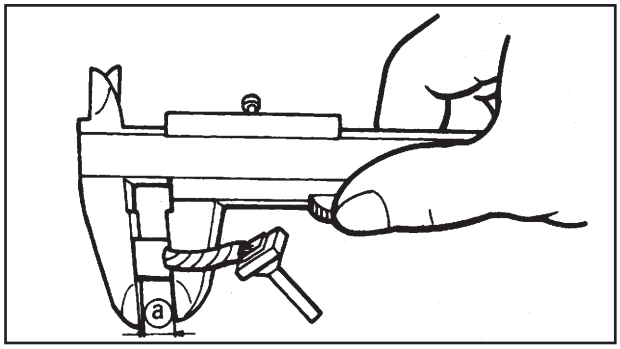

5. Measure:
   - Brush lenght
     Out of specification → Replace all brushes at once.

Brush lenght limit (a):
5.0 mm

6. Inspect:
   - Brush spring strength
     Worn out → Replace all springs at once.

Brush spring strength:
8.82 N (899 gf)

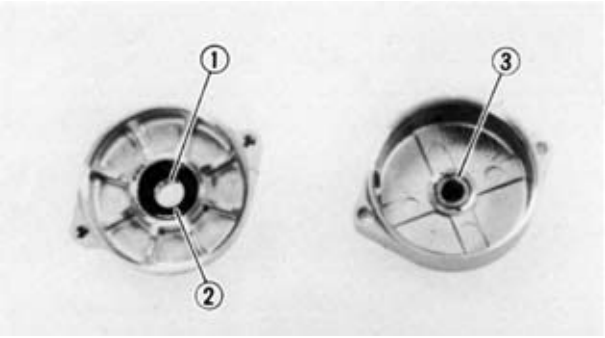

7. Inspect:
   - Bearings (1)
   - Oil seal (2)
   - O-Rings
   - Bush (3)

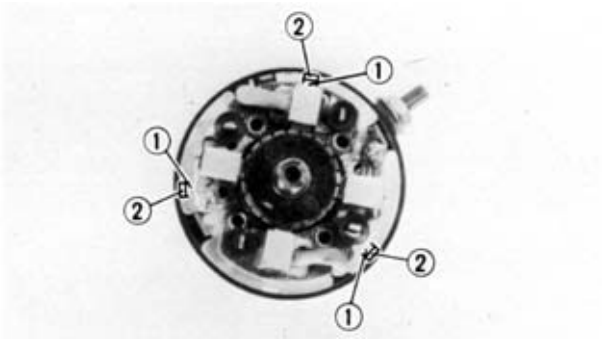

Assembly

Revert the disassembly procedure.
Pay attention to the following points:

1. Install:
   - Brush housing

NOTE:
Align the jutting surface on the brush housing with the slot (2).

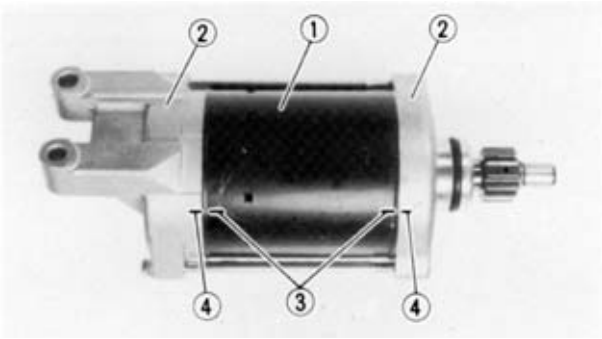

2. Install:
   - Stator (1)
   - Front bracket (2)

NOTE:
Align the reference marks (3) on the stator with the corresponding reference marks on the cover (4).

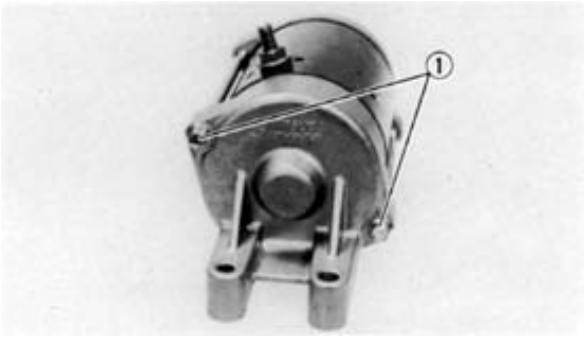

3. Install:
   - Screws (1)

	Screw (stator): **7 Nm (0.7 kgm)**

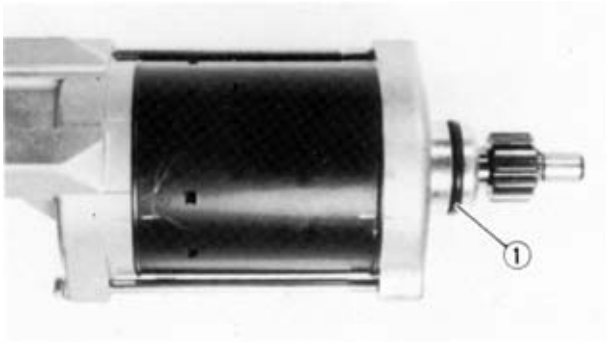

Installation

1. Install:
   - Starter motor.

NOTE:
Slightly grease the O-Ring (1)

	Screw (starter motor): **10 Nm (1.0 kgm)**

CHARGING SYSTEM – CIRCUIT DIAGRAM

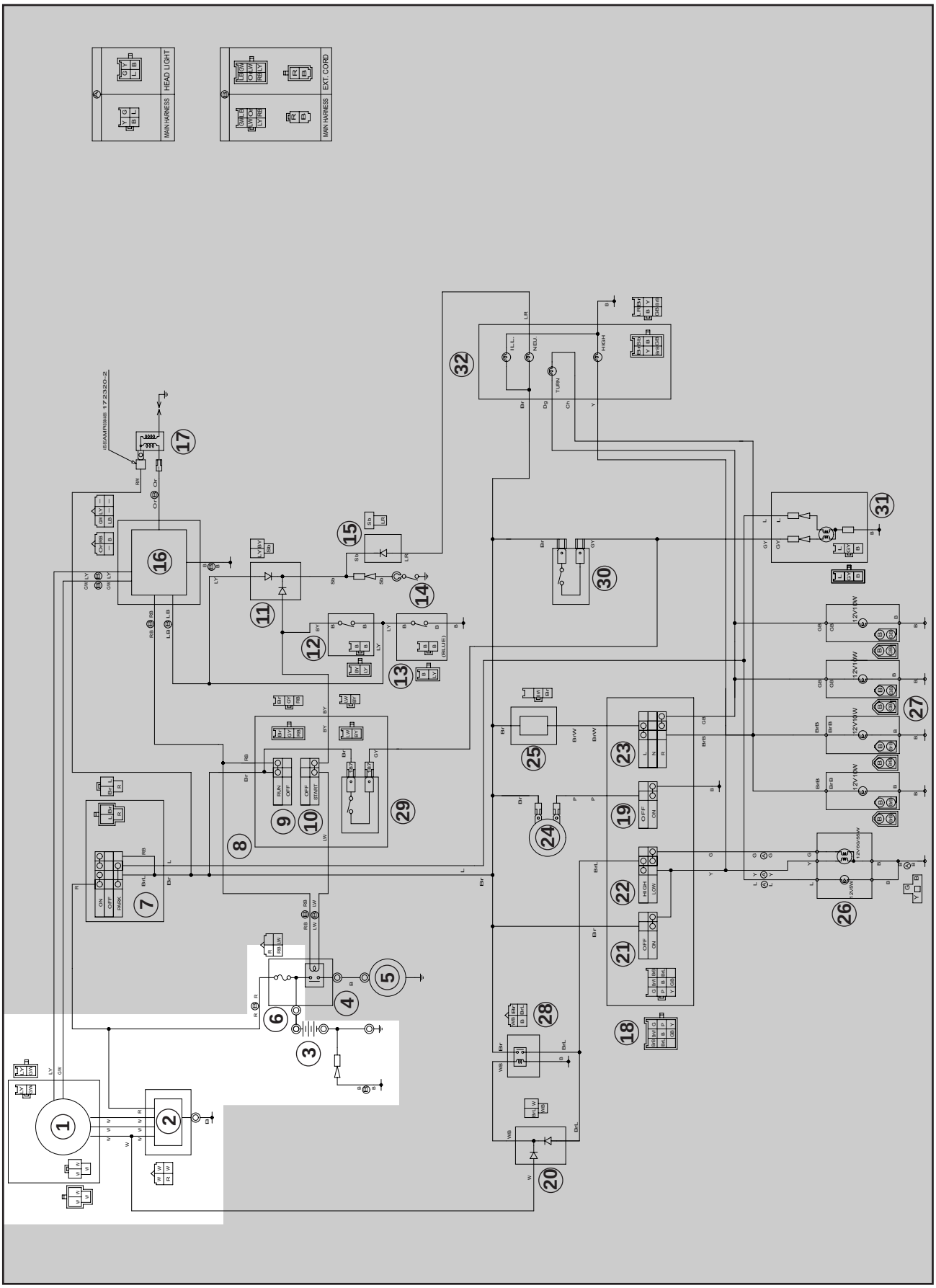

The diagram illustrates the charging circuit inside the motorcycles electric system.

NOTE:

For the colour code and legend, see page 7-2.

(1) AC generator/Pickup coil
(2) Rectifier/Regulator
(3) Battery
(6) Fuse

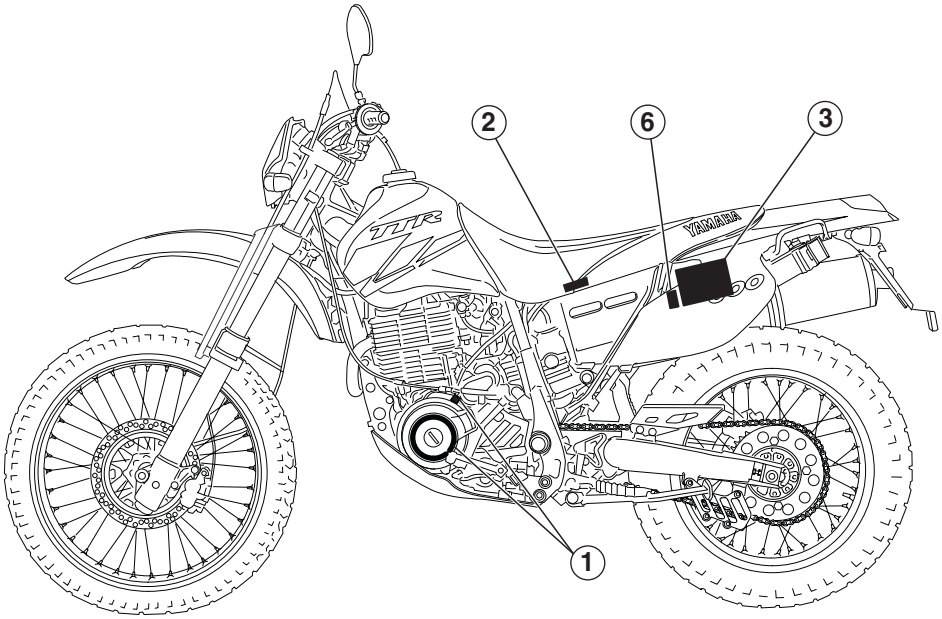

DIAGNOSTICS

THE BATTERY IS NOT BEING CHARGED

Procedure

Inspect:

1. Fuse
2. Battery
3. Charging voltage
4. Stator winding resistance
5. Harness connection (whole connection system)

NOTE:

Before starting inspections, remove the following parts:

1. Seat
2. Rear cowling

- To check for defects use the following special tools.

Inductive rev counter: **P/N. 90890-03113**	**Pocket tester:** **P/N. 90890-03112**

1. Fuse

- Check the fuse for continuity. Refer to “CHECKING THE FUSES” in Chapter 3.
- Is the fuse OK?

NO → Replace the fuse.

YES ↓

2. Battery

- Check the condition of the battery. Refer to “CHECKING AND CHARGING THE BATTERY” in Chapter 3.

Min. open-circuit voltage:
12.8 V or more at 20°C (68°F)

- Is the battery OK?

NO →
- Clean the battery terminals.
- Recharge or replace the battery.

YES ↓

*

*

3. Charging voltage

- Connect the inductive rev counter to the spark plug cable.
- Connect the pocket tester (DC 20V) to the battery, as shown.

Tester terminal (+) → Battery terminal (+)
Tester terminal (-) → Battery terminal (-)

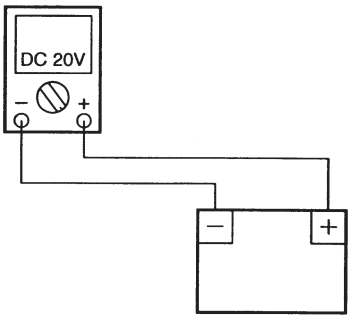

- Start the engine and rev to about 5,000 rpm.
- Check the charging voltage.

Charging voltage:
14.0V at 5,000 rpm

NOTE:
Use a fully charged battery.

IN COMPLIANCE WITH SPECIFICATIONS

Replace the battery.

OUT OF SPECIFICATIONS

4. Stator coil resistance.

- Disconnect the AC generator connector from the harness.
- Connect the pocket tester (Ω x 1) to the stator coils.

Stator coils (1)

Tester terminal (+) → White cable (1)
Tester terminal (-) → White cable (2))

Stator coils (2)

Tester terminal (+) → White cable (1)
Tester terminal (-) → White cable (3)

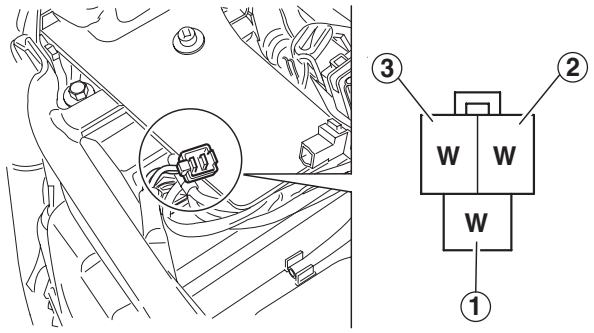

- Check that the winding resistance of the stator complies with specifications.

Stator coil resistance:
White (1) – White (2)
0.65 Ω ± 20% at 20°C (68°F)
White (1) – White (3)
0.65 Ω ± 20% at 20°C (68°F)

OUT OF SPECIFICATIONS → Stator winding is defective. Replace.

IN COMPLIANCE WITH SPECIFICATIONS ↓

5. Wiring connections.

- Check the connections of the entire charging system.
  Refer to “ELECTRICAL CIRCUIT DIAGRAM” section.

UNCERTAIN CONNECTIONS → Correct.

CORRECT ↓

The rectifier/regulator is defective. Replace.

LIGHT SYSTEM - CIRCUIT DIAGRAM

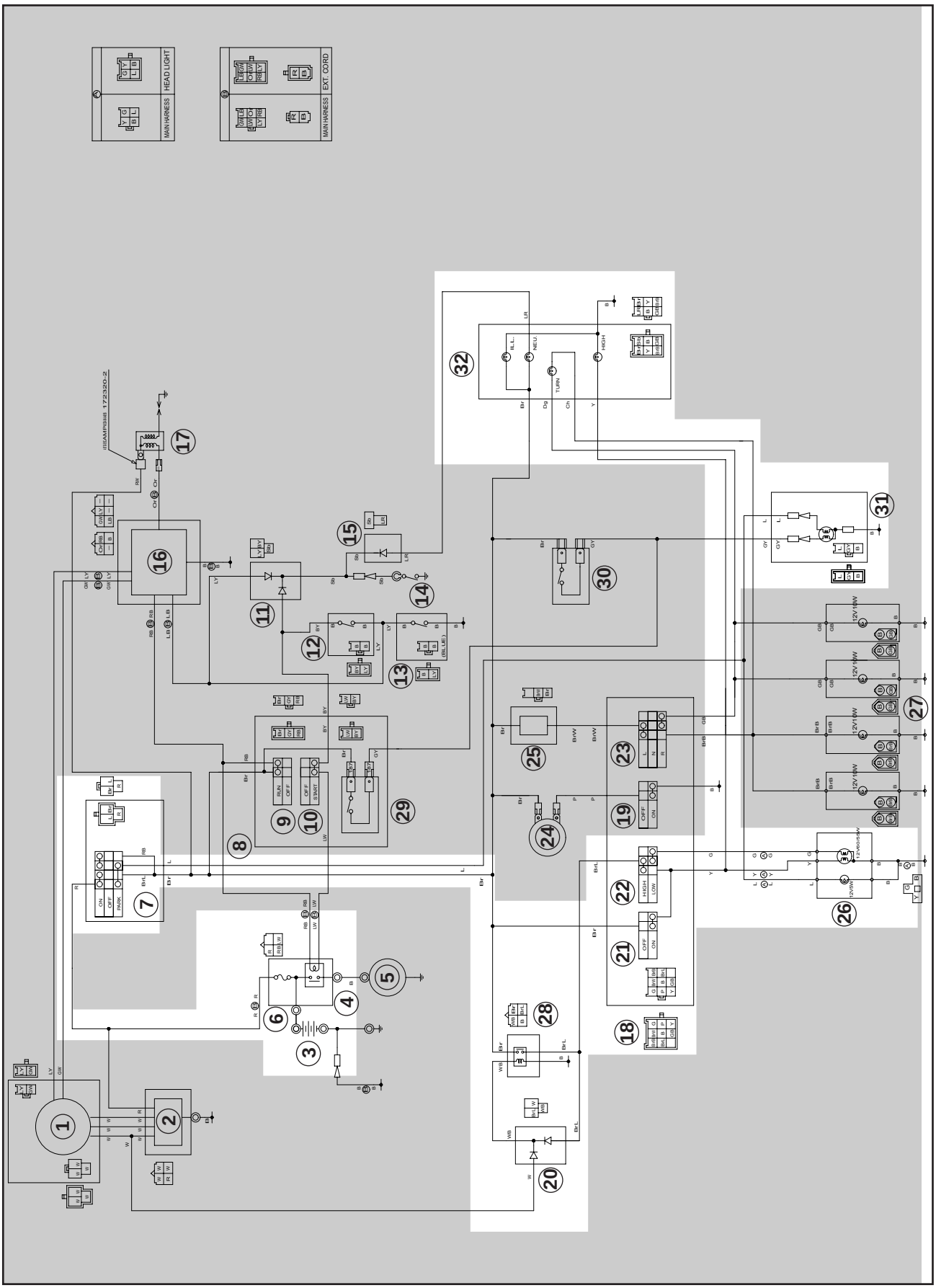

The diagram shows the light system circuit inside the electric system of the motorcycle.

NOTE:

For the colour codes and complete legend, see page 7-2.

(3) Battery
(6) Fuse
(7) Main switch
(18) Left handlebar switch
(20) Diode
(21) Pass switch
(22) Dimmer switch
(26) Headlight
(28) Relay assy
(31) Tail/stop light
(32) Meter

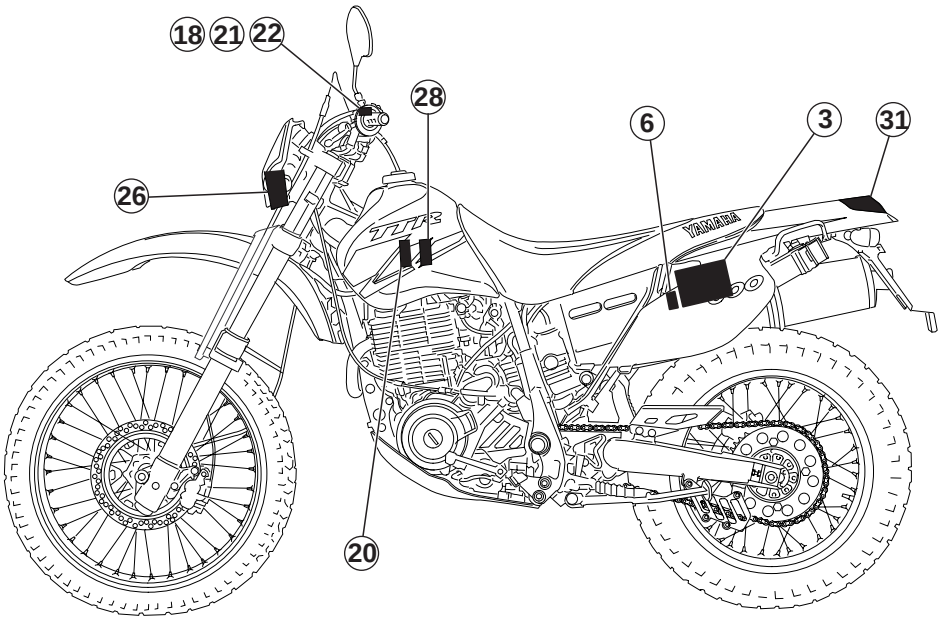

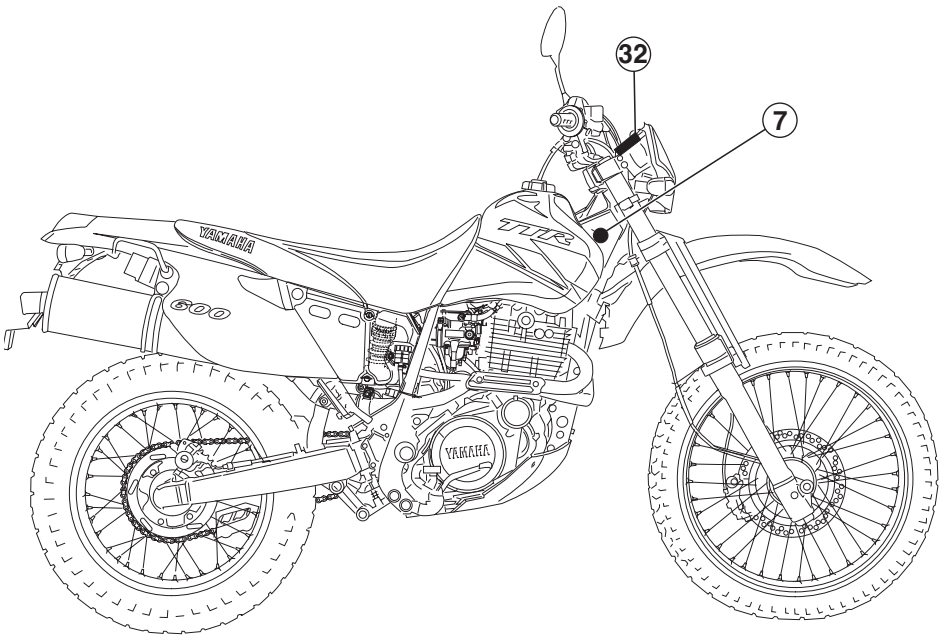

DIAGNOSTICS

THE HIGH BEAM LIGHT, PARKING INDICATOR LIGHT, REAR LIGHT, FRONT PARKING LIGHT AND/OR INSTRUMENT LIGHTS FAIL TO TURN ON.

Procedure

Inspect:
1. Fuse
2. Battery
3. Main switch
4. Dipped/high beam light and dimmer switch
5. Relay assy
6. Harness connections (full system of connections)

NOTE:
- Before starting inspections, remove the following parts:
1. Seat
2. Rear cowling
3. Cowling (headlight)
4. Tail light cover
- To check for defects use the following special tools.

	Pocket tester: **P/N. 90890-03112**

1. Fuse
- Check the fuse for continuity.
  Refer to “CHECKING THE FUSES” in Chapter 3.
- Is the fuse OK?

NO → Replace the fuse.

YES ↓

2. Battery
- Check the condition of the battery.
  Refer to “CHECKING AND CHARGING THE BATTERY” in Chapter 3.

Min. open-circuit voltage:
12.8 V or more at 20°C (68°F)

- Is the battery OK?

NO →
- Clean the battery terminals.
- Recharge or replace the battery.

YES ↓

*

*

3. Main switch.

- Disconnect the main switch connector from the wire harness.
- Connect the pocket tester (Ω x 1) to the switch cables.
  Refer to “SWITCH CHECK” in CHAPTER 3.

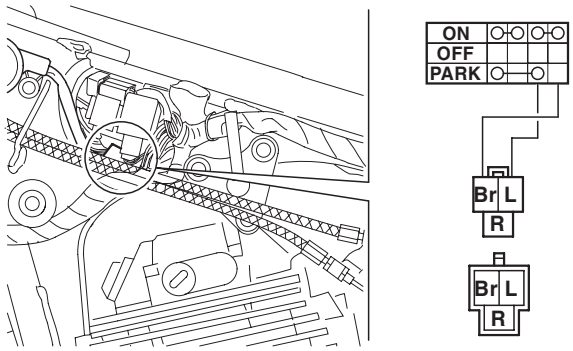

INCORRECT

The main switch is defective. Replace.

CORRECT

4. Dipped/high beam commutator and dimmer switch.

- Disconnect the left handlebar switch connector from the wire harness.
- Connect the pocket tester (Ω x 1) to the left handlebar switch terminals.
- Check the switch component for continuity between “Brown (1)” and “Yellow (2)”, “Brown/Blue (3)” and “Green (4)”, “Brown/Blue (3)” and “Yellow (2)”. Refer to “SWITCH CHECK” in CHAPTER 3.

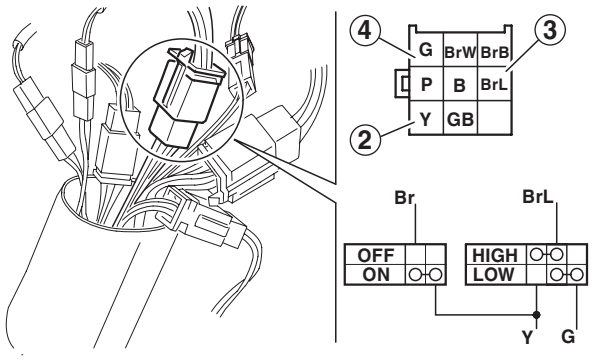

INCORRECT

The dipped/high beam commutator and/or the dimmer switch are defective. Replace the left handlebar switch.

CORRECT

*

*

5. Starter circuit cut-off relay.

- Connect the pocket tester (DC 20V) and the battery (12V) to the cut-off relay connector terminal of the starter circuit.

Battery terminal (+) → White/Black terminal (1)
Battery terminal (–) → Black terminal (2)
Tester terminal (+) → Brown terminal (3)
Tester terminal (–) → Earth

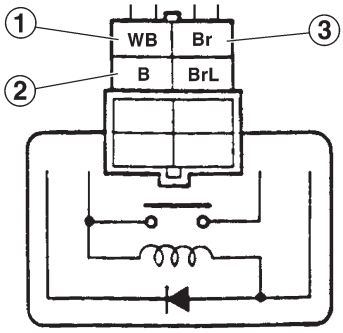

- Turn the main switch to ON.
- Check the voltage (12V) on the "Brown/Blue" and "Brown" cable to the connector terminal of the starter circuit cut-off relay.

DISCONTINUITY

The starter circuit cut-off relay is defective. Replace.

IN COMPLIANCE WITH SPECIFICATIONS (12V)

6. Harness connections.

- Check the connections of the entire light system.

DEFECTIVE CONNECTIONS

Repair.

CORRECT

Check the conditions of each circuit for the entire light system.
See the "ELECTRIC CIRCUIT DIAGRAM".

LIGHT SYSTEM INSPECTION

NOTE:

To proceed to the control of the light system, start the engine and then stop it by the emergency engine stop switch. In this way the light relay remains excited and it is possible to check the light system.

1. The front headlight and the high beam light fail to turn on.

1. Bulb and bulbholder.
• Check the continuity of the bulb and bulbholder. Refer to “BULB INSPECTION” section.

DISCONTINUITY → Replace the bulb and/or the bulbholder.

CONTINUITY ↓

2. Voltage.
• Connect the pocket tester (DC 20V) to the front headlight connectors and the high beam switch.
Headlight: **Tester terminal (+) → Green (2) or Yellow (1) cable** **Tester terminal (–) → Black cable (3)** **High beam light:** **Tester terminal (+) → Yellow cable (4)** **Tester terminal (–) → Black cable (5)**
A 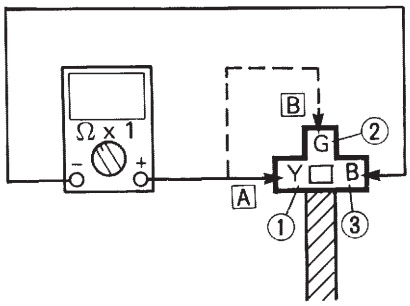
B 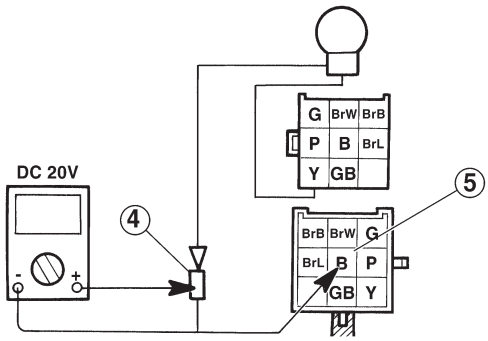
[A] When the lights switch (commutator) is at position “HI”. [B] When the lights switch (commutator) is at position “LO”.

OUT OF SPECIFICATION → The circuit from the main switch to the bulbholder connector is defective. Repair.

- Turn the main switch to ON.
- Turn the lights switch to “LO” or “HI”.
- Check the voltage (12V) on the “Green” and “Yellow” cable at the bulbholder terminals.

IN COMPLIANCE WITH SPECIFICATIONS (12V)

The circuit is efficient.

2. The instrument light and/or the parking indicator light fails to turn on.

1. Bulb and bulbholder.

- Check the continuity of the bulb and bulbholder.
  Refer to “BULB INSPECTION” section.

DISCONTINUITY

Replace the bulb and/or the bulbholder.

CONTINUITY

2. Voltage.

- Connect the pocket tester (DC 20V) to the bulbholder connector.

Tester terminal (+) → Blue cable (1)
Tester terminal (–) → Black cable (2)

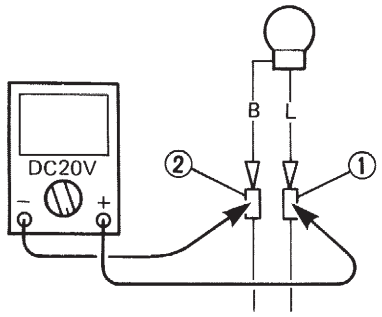

- Turn the main switch to ON.
- Check the voltage (12V) on the “Blue” cable of the bulbholder connector.

OUT OF SPECIFICATION

The circuit from the main switch to the bulbholder connector is defective. Repair.

IN COMPLIANCE WITH SPECIFICATIONS (12V)

The circuit is efficient.

3. The parking light fails to turn on.

1. Bulb and bulbholder.
• Check the continuity of the bulb and bulb-holder. Refer to “BULB INSPECTION” section.

DISCONTINUITY → Replace the bulb and/or bulbholder.

CONTINUITY ↓

2. Voltage.
• Connect the pocket tester (DC 20V) to the bulbholder connector.
Tester terminal (+) → Blue terminal (1) **Tester terminal (–) → Black terminal (2)**
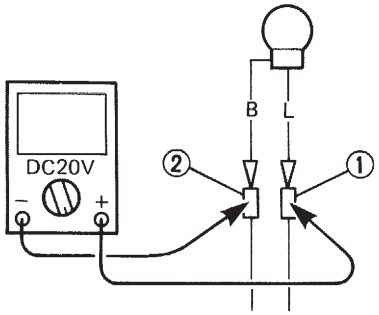
• Turn the main switch to ON. • Check the voltage (12V) on the “Blue” cable of the bulbholder connector.

OUT OF SPECIFICATION → The circuit from the main switch to the bulbholder connector is defective. Repair.

IN COMPLIANCE WITH SPECIFICATIONS (12V) ↓

The circuit is efficient.

4. The rear light fails to turn on.

1. Bulb and bulbholder.

- Check the continuity of the bulb and bulbholder.
  Refer to “BULB INSPECTION” section.

DISCONTINUITY → Replace the bulb and/or bulbholder.

CONTINUITY ↓

2. Voltage.

- Connect the pocket tester (DC 20V) to the bulbholder connector.

Tester terminal (+) → Blue terminal (1)
Tester terminal (–) → Black terminal (2)

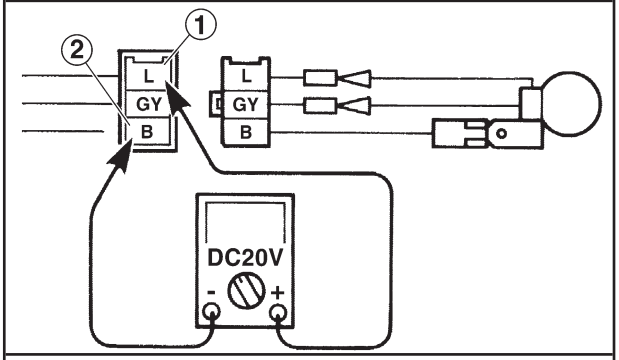

- Turn the main switch to ON.
- Check the voltage (12V) on the “Blue” cable of the bulbholder connector.

OUT OF SPECIFICATION → The circuit from the main switch to the bulbholder connector is defective. Repair.

IN COMPLIANCE WITH SPECIFICATIONS (12V) ↓

The circuit is efficient.

SIGNAL SYSTEM - CIRCUIT DIAGRAM

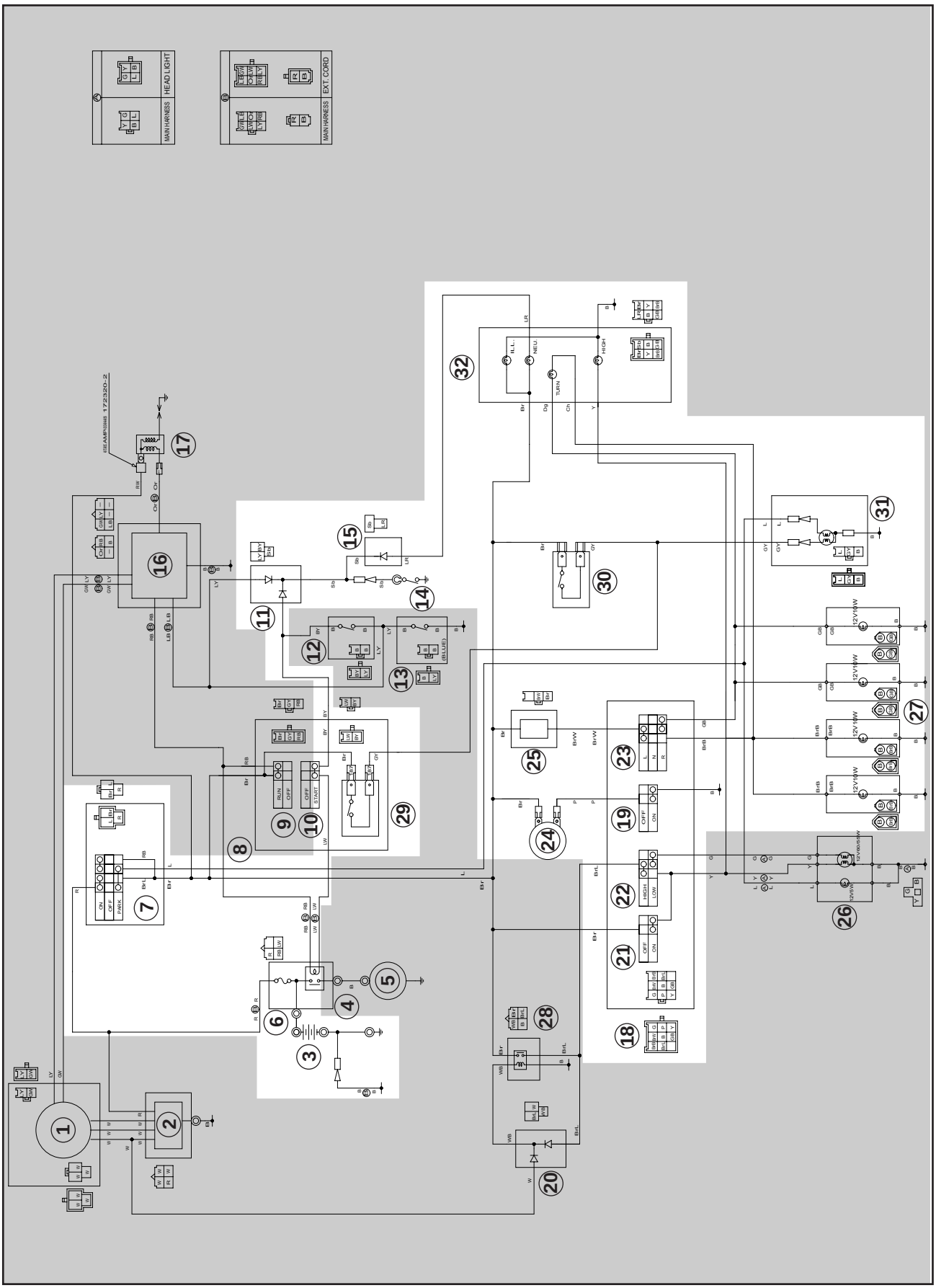

The diagram shows the signal system circuit inside the electric system of the motorcycle.

NOTE:

For the colour codes and complete legend, see page 7-2.

(3) Battery
(6) Fuse
(7) Main switch
(11) Diode
(14) Neutral switch
(15) Diode
(18) Left handlebar switch
(19) Horn switch
(23) Flasher switch
(24) Horn
(25) Flasher relay
(27) Flasher light
(29) Front brake switch
(30) Rear brake switch
(31) Tail/stop light
(32) Meter

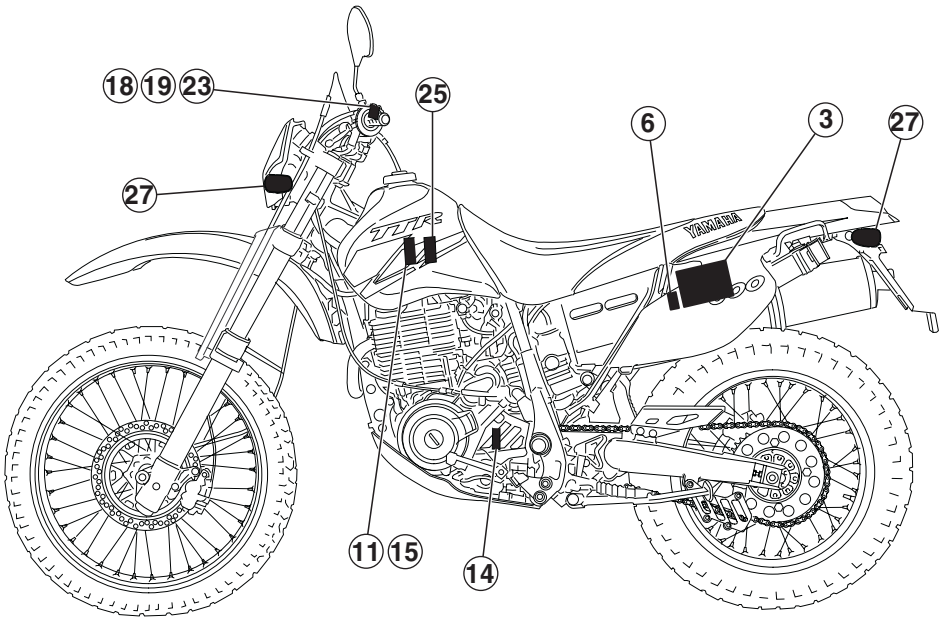

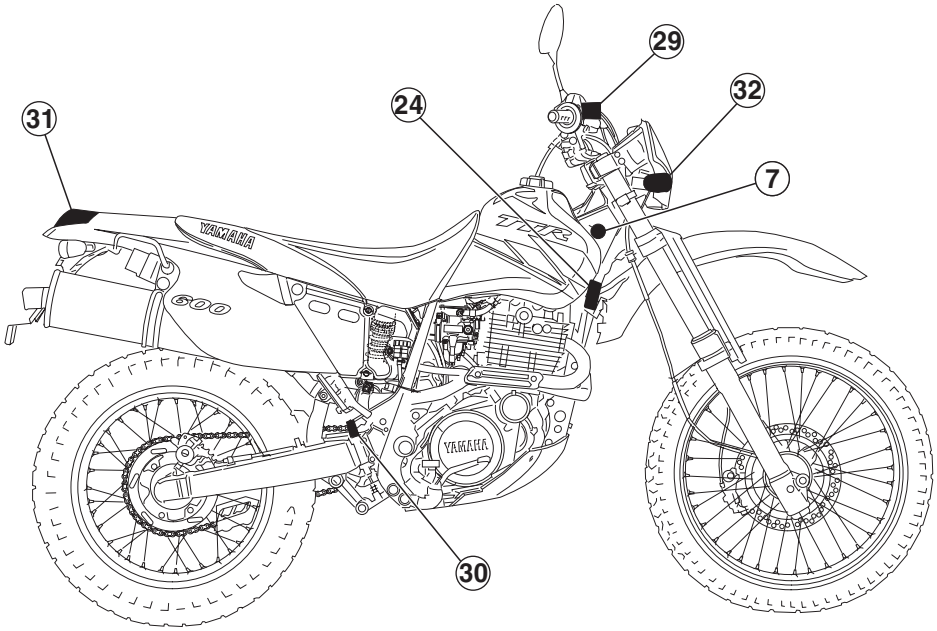

DIAGNOSTICS

- **THE FLASHER LIGHTS, BRAKE LIGHT AND/OR WARNING LIGHTS FAIL TO TURN ON.**
- **THE HORN FAILS TO SOUND.**

Procedure

Check:
1. Fuse
2. Battery
3. Main switch
4. Harness connections (entire system of connections)

NOTE:

- Before starting inspections, remove the following parts:
1. Seat
2. Rear cowling
3. Cowling (headlight)
4. Tail light cover
- To check for operating faults use the following special tools.

	Pocket tester: **P/N. 90890-03112**

1. Fuse
• Check the fuse for continuity. Refer to “CHECKING THE FUSES” in Chapter 3. • Is the fuse OK?

NO → Replace the fuse.

YES ↓

2. Battery.	
• Check the condition of the battery. Refer to “CHECKING AND CHARGING THE BATTERY” in Chapter 3.	
	Min. open-circuit voltage: **12.8 V or more at 20°C (68°F)**
• Is the battery OK?	

NO →
- Clean the battery terminals.
- Recharge or replace the battery.

YES ↓

*

*

3. Main switch.

- Disconnect the main switch connector (Blue, Red and Brown) from the wire harness.
- Connect the pocket tester (Ω x 1) to the main switch cables.
  Refer to “SWITCH CHECK” section.

Tester terminal (+) → Red cable (1)
Tester terminal (–) → Brown cable (2)
Tester terminal (–) → Blue cable (3)

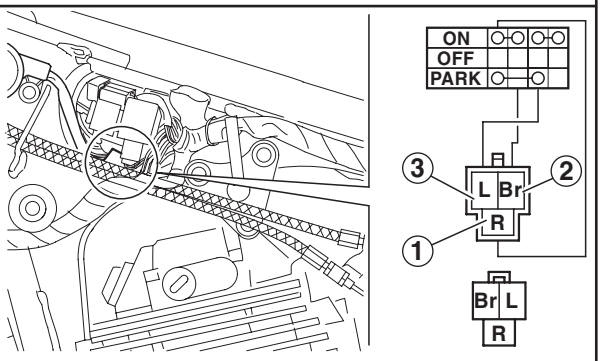

DISCONTINUITY

The main switch is defective. Replace.

CORRECT

4. Harness connections

- Check the connections of the entire signal system.

UNCERTAIN CONNECTIONS

Repair.

CORRECT

Check the condition of each signal system. Refer to “ELECTRICAL CIRCUIT DIAGRAM” section.

SIGNAL SYSTEM CONTROL

1. The horn does not work.

1. Horn switch.

- Disconnect the left handlebar switch connector from the wire harness.
- Connect the pocket tester (Ω x 1) to the switch terminals.
- Check the switch component for continuity between “Pink (1)” and “Black (2)”. Refer to “SWITCH CHECK” section.

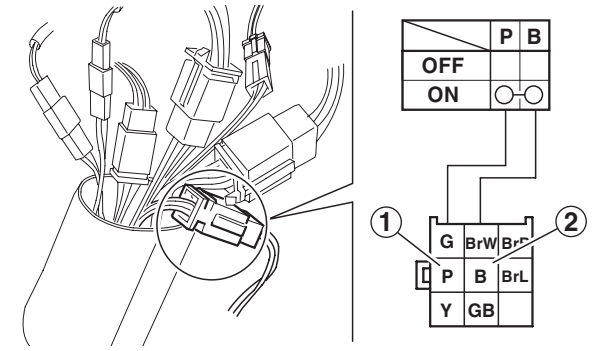

DISCONTINUITY

The horn switch is defective. Replace the left handlebar switch.

CORRECT

2. Voltage.

- Connect the pocket tester (DC 20V) to the horn cable.

Tester terminal (+) → Brown terminal (1)
Tester terminal (–) → Earth

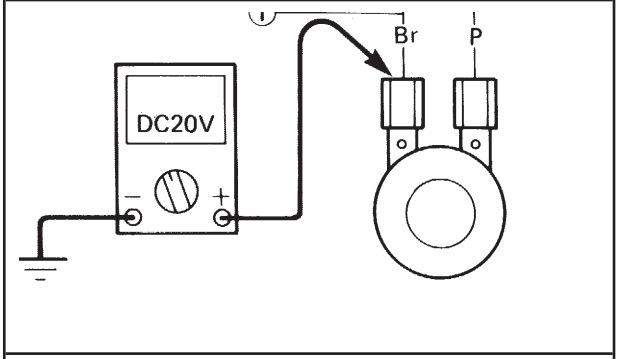

- Turn the main switch to ON.
- Check the voltage (12V) on the “Brown” terminal of the horn.

OUT OF SPECIFICATIONS

The circuit from the main switch to the horn terminal is defective. Repair.

IN COMPLIANCE WITH SPECIFICATIONS (12V)

*

*

3. Horn.

- Disconnect the “Pink” cable from horn terminal.
- Connect a special cable (1) to the horn terminal and earth the cable.
- Turn the main switch to ON.

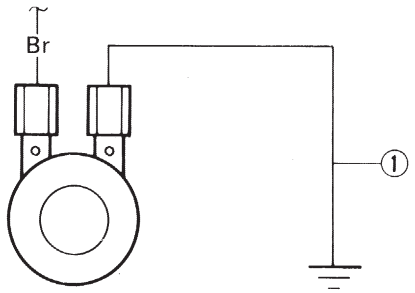

THE HORN WORKS

The horn is efficient.

THE HORN DOES NOT WORK

4. Voltage.

- Connect the pocket tester (DC 20V) to the “Pink” terminal of the horn.

Tester terminal (+) → Pink cable (1)
Tester terminal (–) → Earth

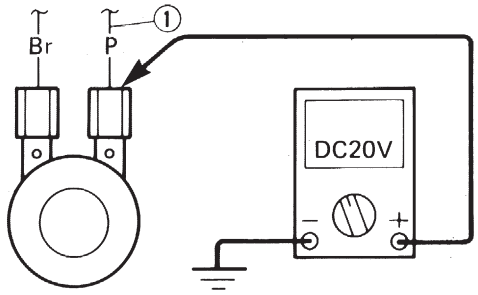

- Turn the main switch to ON.
- Check the voltage (12V) on the “Pink” terminal of the horn.

OUT OF SPECIFICATION

The horn is defective. Repair.

IN COMPLIANCE WITH SPECIFICATIONS (12V)

Repair or replace the horn.

2. The rear stop light fails to turn on.

1. Bulb and bulbholder.
• Check the continuity of the bulb and bulbholder. Refer to “BULB INSPECTION” section.

DISCONTINUITY

Replace the bulb and/or bulbholder.

CONTINUITY

2. Brake switch.
• Disconnect the brake switch cables and the connector from the wire harness. • Connect the pocket tester (Ω x 1) to the brake switch terminals. • Check the switch component for continuity between “Green/Yellow (1)” and “Brown (2)”, or “Black (3)” and “Black (4)”. Refer to “SWITCH CHECK” section.

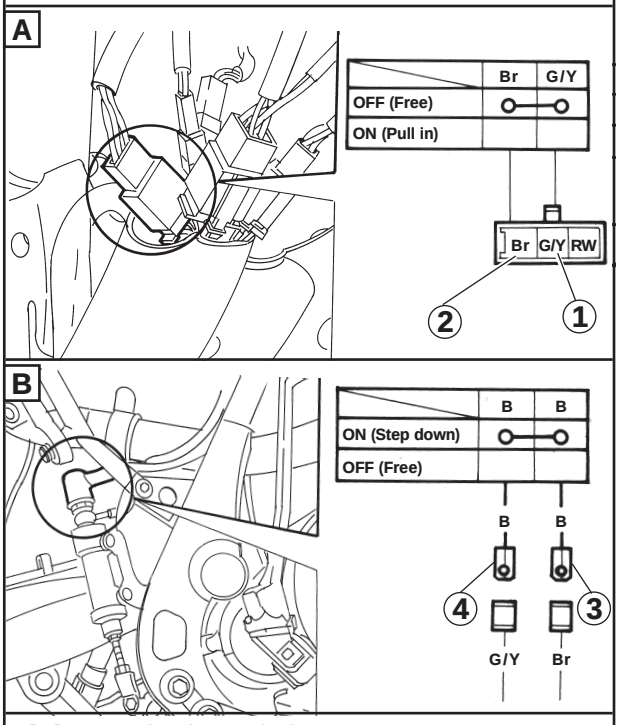

[A] Front brake switch
[B] Rear brake switch

INCORRECT

The brake switch is defective. Replace.

*

*

3. Voltage.

- Connect the pocket tester (DC 20V) to the bulbholder connector.

Tester terminal (+) → Green/Yellow cable (1)
Tester terminal (–) → Black terminal (2)

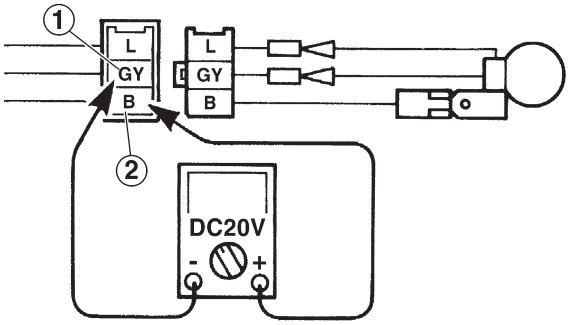

- Turn the main switch to ON.
- The brake lever is pulled or the brake pedal is pressed.
- Check the voltage (12V) on the "Green/Yellow" cable of the bulbholder connector.

OUT OF SPECIFICATION

The circuit from the main switch to the bulbholder connector is defective. Repair.

IN COMPLIANCE WITH SPECIFICATIONS (12V)

The circuit is efficient.

3. The direction indicator light and/or the direction indicator light fail to flash.

1. Bulb and bulbholder.

- Check the continuity of the bulb and bulbholder.

  Refer to "BULB INSPECTION" section.

DISCONTINUITY

Replace the bulb and/or bulbholder.

CONTINUITY

2. Direction indicator switch.

- Disconnect the left handlebar switch connector from the wire harness.
- Connect the pocket tester (Ω x 1) to the left handlebar switch cables.

- Check the switch component for continuity between “Brown/White (1)” and “Brown/Black (2)” and “Brown/White (1)” and “Green/Black (3)”.
  Refer to “SWITCH CHECK” section.

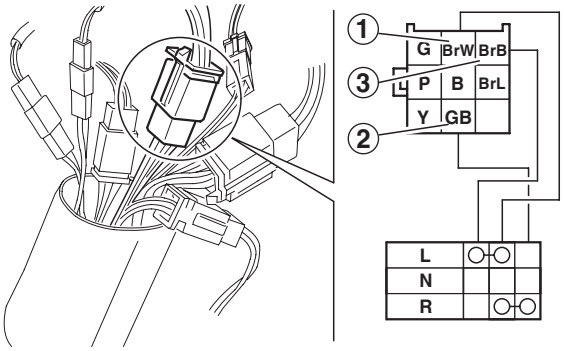

INCORRECT

The direction indicator switch is defective. Replace.

CORRECT

3. Direction indicator lamp relay.

- Connect the pocket tester (DC 20V) to the indicator lamp relay.

Tester terminal (+) → Brown terminal (1)
Tester terminal (–) → Earth

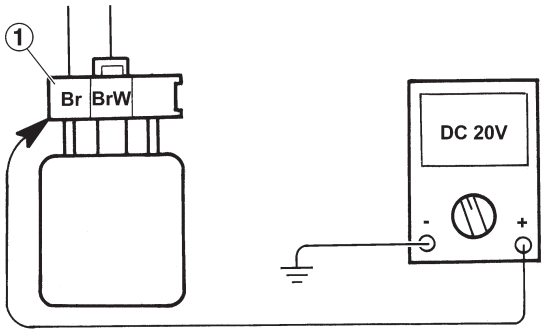

- Turn the main switch to ON.
- Check the voltage (12V) on the “Brown” cable to the indicator lamp relay terminal.

OUT OF SPECIFICATION

The circuit from the main switch to the lamp relay connector is defective. Repair.

IN COMPLIANCE WITH SPECIFICATIONS (12V)

*

*

4. Voltage.

- Connect the pocket tester (DC 20V) to the bulbholder connector.

Tester terminal (+) → Brown/White terminal (1)
Tester terminal (–) → Earth

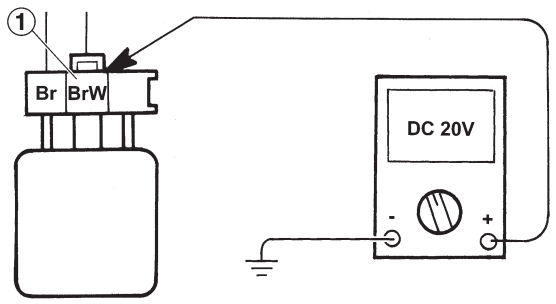

- Turn the main switch to ON.
- Check the voltage (12V) on the "Blue" cable to the bulbholder connector.

OUT OF SPECIFICATION

The direction indicator lamp relay is defective. Replace.

IN COMPLIANCE WITH SPECIFICATIONS (12V)

*

*

5. Voltage.

- Connect the pocket tester (DC 20V) to the bulbholder connector.
- Connect the left handlebar switch connector to the wire harness.

To the left flasher light:
Tester terminal (+) ➔
Green/Black terminal (1)
Tester terminal (–) ➔ Earth

To the right flasher light:
Tester terminal (+) ➔
Brown/Black terminal (1)
Tester terminal (–) ➔ Earth

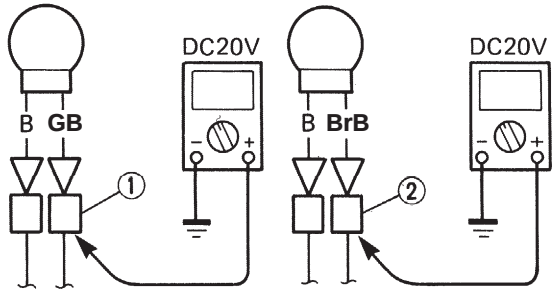

- Turn the main switch to ON.
- Turn the direction indicator switch to “L” or “R”.
- Check the voltage (it flashes at 2-8V) on the “Green/Black” or “Brown/Black” cable at the bulbholder connector.

OUT OF SPECIFICATION

The circuit from the direction indicator switch to the bulbholder is defective. Repair.

IN COMPLIANCE WITH SPECIFICATIONS (12V)

The circuit is efficient.

4. The “N” neutral light fails to turn on.

1. Bulb and bulbholder.
• Check the continuity of the bulb and bulb-holder. Refer to “BULB INSPECTION” section.

DISCONTINUITY → Replace the bulb and/or bulbholder.

CONTINUITY ↓

2. Neutral switch.
• Disconnect the neutral switch cable from the wire harness. • Connect the pocket tester (Ω x 1) to the neutral switch cables. • Check the switch component for continuity between “Sky blue (1)” and “earth”. Refer to “SWITCH CHECK” section.

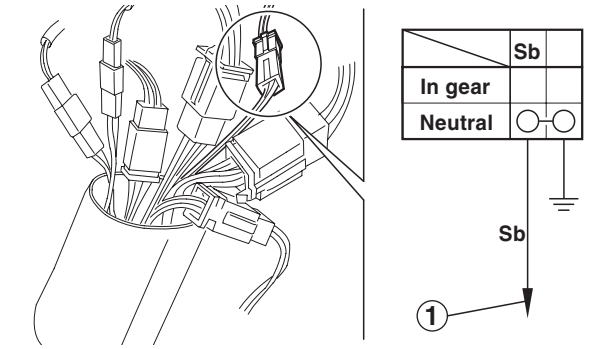

INCORRECT → The neutral switch is defective. Replace.

CORRECT ↓

3. Voltage.
• Connect the pocket tester (DC 20V) to the bulbholder connector.
Tester terminal (+) → Brown cable (1) **Tester terminal (–) → Earth**

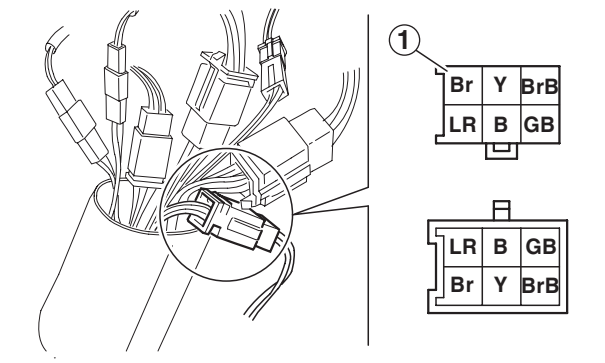

- Turn the main switch to ON.
- Check the voltage (12V) on the Brown cable of the bulbholder connector.

OUT OF SPECIFICATION

The circuit from the main switch to the bulbholder connector is defective. Repair.

IN COMPLIANCE WITH SPECIFICATIONS (12V)

4. Neutral switch cable.

- Disconnect the neutral switch connector from the wire harness and the bulbholder connector.
- Connect the pocket tester (Ω x 1) to the neutral switch cable (on the harness side) and the bulbholder connector (1).

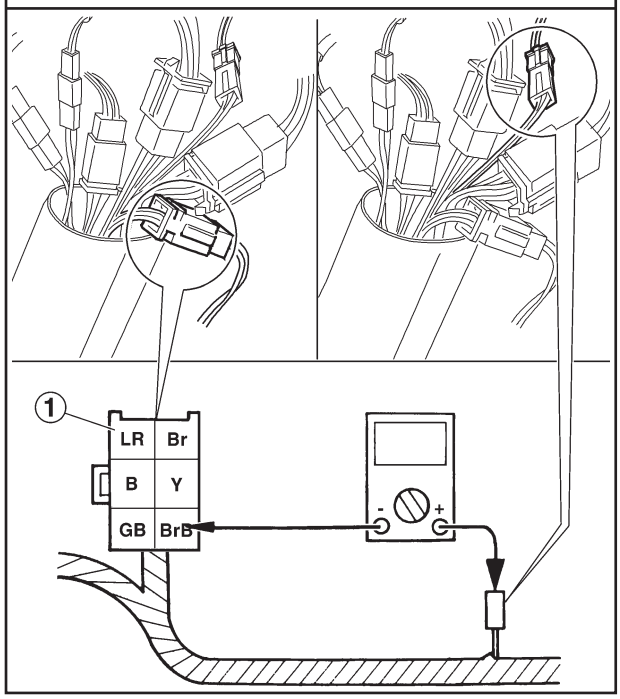

DISCONTINUITY

The circuit from the bulb to the neutral switch cable is defective. Repair.

CONTINUITY

The circuit is efficient.

?

TRBL
SHTG

8

CHAPTER 8°
TROUBLESHOOTING

FAILURE TO START/DIFFICULTIES IN STARTING 8-1
FUEL SYSTEM 8-1
ELECTRICAL SYSTEM 8-2
POOR ENGINE COMPRESSION 8-2

POOR PERFORMANCE AT IDLE SPEED 8-3

UNSATISFACTORY PERFORMANCE AT MEDIUM-HIGH SPEED 8-3

DIFFICULTIES IN SHIFTING 8-4
SHIFTING IMPOSSIBLE 8-4
THE SHIFT PEDAL FAILS TO MOVE 8-4
DISENGAGING GEARS 8-4

CLUTCH SLIDES OR FAILS TO RELEASE 8-5
CLUTCH SLIDES 8-5
CLUTCH FAILS TO RELEASE 8-5

DEFECTIVE BRAKES 8-6
POOR BRAKING 8-6

OIL LEAKS OR MALFUNCTIONING OF FRONT FORK 8-6
OIL LEAKS 8-6
MALFUNCTIONING 8-6

UNSTABLE STEERING 8-7

DEFECTIVE FUNCTIONING OF LIGHTS AND INDICATORS 8-8
POOR HEADLIGHT ILLUMINATION 8-8
FREQUENT BURNING OF BULB 8-8
DIRECTION INDICATORS FAIL TO TURN ON 8-8
DIRECTION INDICATORS FAIL TO TURN OFF 8-8
DELAYED TURNING ON OF INDICATORS 8-9
EXCESSIVE INDICATOR INTERMITTENCE FREQUENCY 8-9
THE HORN FAILS TO WORK 8-9

OVERHEATING OF ENGINE 8-9

TROUBLESHOOTING

NOTE:

The troubleshooting tables that follow do not identify every cause of trouble. They may however prove helpful as a guide to identifying trouble. To inspect, adjust or replace parts, refer to the appropriate section in the manual.

FAILURE TO START/DIFFICULTIES IN STARTING

FUEL SYSTEM	PROBABLE CAUSES
Fuel tank	• Empty • Fuel filter obstructed • Fuel tank air cap passage obstructed • Petrol contains water or impurities or is adulterated
Fuel cock	• Hose obstructed • Fuel filter obstructed
Carburetor	• Petrol contains water or impurities or is adulterated • Pilot jet obstructed • Pilot air passage obstructed • Infiltrations of air • Deformation of float • Needle valve worn or scratched • Needle valve seat insufficiently sealed • Fuel level set wrongly • Pilot jet set wrongly • Starter jet obstructed • Malfunctioning of the starter piston
Air filter	• Air filter element obstructed

ELECTRICAL SYSTEM	PROBABLE CAUSES
Spark plug	• Electrodes gap not correct • Electrodes worn • Feed cable interrupted • Wrong thermal grading of spark plug • Defective spark plug cap
Ignition coil	• Primary or secondary winding interrupted • High voltage cable defective • Defective coil
Ignition unit	• Defective unit • Defective pick-up coil • Woodruff key broken
Switches and cables	• Main switch defective • Emergency stop engine switch defective • Harness with cable interrupted • Neutral switch defective • Sidestand switch defective • Clutch switch defective • Starter switch defective
Starter motor	• Starter motor defective • Starter motor relay defective • Diodes defectives • Starter one-way bearing defective

POOR ENGINE COMPRESSION	PROBABLE CAUSES
Cylinder and cylinder head	• Spark plug tightening insufficiently • Cylinder head or cylinder insufficiently tightened • Cylinder head gasket broken • Cylinder gasket broken • Cylinder worn, damaged or seized
Piston and piston rings	• Piston rings wrongly assembled • Piston rings worn, yielded or broken • Piston rings stuck together • Piston seized or damaged
Crankcase and valves, crankshaft	• Poor crankcase sealing • Crankshaft oil seal edge damaged • Poor valve sealing • Valve and seat with insufficient contact • Valve timing wrongly • Valve spring broken • Crankshaft seized • Camshaft seized

POOR PERFORMANCE AT IDLE SPEED

PROBABLE CAUSES

- Carburetor
  - The starter piston fails to return freely
  - Pilot jet obstructed or loose
  - Pilot jet obstructed
  - Pilot air screw wrongly set
  - Idle speed wrongly set (throttle valve stop screw)
  - Throttle cable free play wrongly set
  - Carburetor flooded
- Electrical system
  - Defective battery
  - Defective spark plug
  - Defective ignition unit
  - Defective AC magneto
  - Defective ignition coil
- Valves
  - Valve clearance wrongly set

UNSATISFACTORY PERFORMANCE AT MEDIUM-HIGH SPEED

See “FAILURE TO START/DIFFICULTIES IN STARTING”.
(FUEL SYSTEM, ELECTRICAL SYSTEM, COMPRESSION SYSTEM and Valve clearance)

PROBABLE CAUSES

- Carburetor
  - Petrol contains water or impurities or is adulterated
  - Infiltrations of air
  - Deformation of float
  - Defective diaphragm
  - Needle valve worn or scratched
  - Needle valve seat insufficiently sealed
  - Needle stop position incorrect
  - Fuel level set wrongly
  - Main jet obstructed or loose
  - Main nozzle obstructed or loose
- Air filter
  - Air filter element obstructed

DIFFICULTIES IN SHIFTING

SHIFTING IMPOSSIBLE	PROBABLE CAUSES
Clutch	• Clutch cable wrongly set • Wrong position of push lever • Irregular engagement of push lever and push rod • Pressure plate deformed • Clutch springs not preloaded uniformly • Reference marks not aligned • Push rod broken • Clutch gear assy nut loose or push rod deformed • Primary driven gear bearing defective • Driven plates deformed • Driving plates deformed • Clutch cable damaged
Engine oil	• Oil level over maximum • Incorrect gradation (high viscosity) • Degradation

THE SHIFT PEDAL FAILS TO MOVE	PROBABLE CAUSES
Shift shaft	• Shift shaft deformed
Shift cam, shift fork	• Groove with impurities or foreign bodies • Shift fork stuck • Shift fork guide bar deformed
Transmission	• Transmission gears struck • Gears stuck by impurities or foreign bodies • Wrong transmission assembly

DISENGAGING GEARS	PROBABLE CAUSES
Shift shaft	• Shift lever set wrongly • Shift cam stop lever fails to return freely
Shift fork	• Shift forks worn
Shift cam	• Shaft cam with thrust free play • Shift cam groove worn
Transmission	• Gear clutches worn

CLUTCH SLIDES OR FAILS TO RELEASE

CLUTCH SLIDES	PROBABLE CAUSES
Clutch	• Clutch cable wrongly set • Clutch springs loose • Clutch spring yielded • Friction plates worn • Clutch plates worn • Clutch improperly assembled
Engine oil	• Oil level below minimum • Incorrect gradation (low viscosity) • Degradation

CLUTCH FAILS TO RELEASE

Refer to “SHIFTING IMPOSSIBLE” section.

DEFECTIVE BRAKES

POOR BRAKING

PROBABLE CAUSES

- Brake pads worn
- Brake disc worn
- Water in the brake fluid
- Brake fluid leak
- Brake fluid tank defective
- Bleed cap not sealed to calipers
- Union bolt loose
- Brake hose cracked
- Brake disc dirty or greasy
- Brake pads dirty or greasy
- Incorrect brake fluid level

OIL LEAKS OR MALFUNCTIONING OF FRONT FORK

OIL LEAKS

PROBABLE CAUSES

- Inner tube deformed, damaged or rusty
- Outer tube damaged or cracked
- Oil seal lip damaged
- Oil seal assembled incorrectly
- Oil level incorrect (excessive)
- Shock-absorber rod stop bolt loose
- O-ring on cap bolt broken

MALFUNCTIONING

PROBABLE CAUSES

- Inner tube deformed, damaged or rusty
- Outer tube deformed or damaged
- Fork spring damaged
- Piston worn or damaged
- Shock-absorber rod deformed or damaged
- Incorrect oil viscosity
- Incorrect oil level

UNSTABLE STEERING

	PROBABLE CAUSES
Handlebar	• Assembled crooked or incorrectly
Steering	• Handlebar crown assembled incorrectly • Lower bracket crooked • Lower steering column installed incorrectly (threaded ring nuts not tightened correctly) • Bearing or bearing tracks damaged
Front fork	• Oil level not the same in both tubes • Spring broken • Front fork crooked
Tyres	• Tyre pressure incorrect for type of road • Tyre pressure incorrect • Tyres worn non-uniformly
Wheels	• Wheels balanced incorrectly • Wheel deformed • Bearing loose • Wheel axle deformed or loose • Wheels excessively off-centre
Frame	• Deformed • Head tube damaged • Ball track installed incorrectly
Rear arm	• Bushes or bearings consumed • Deformed or damaged
Rear shock absorber	• Spring yielded • Spring preloaded • Oil leak
Drive chain	• Chain set incorrectly

DEFECTIVE FUNCTIONING OF LIGHTS AND INDICATORS

HEADLIGHT DOES NOT LIGHT

PROBABLE CAUSES

- Incorrect bulb
- Excessive absorption of electrical accessories
- Difficulties in charging (charging coil broken and/or rectifier/regulator defective)
- Uncertain connections
- Wrong negative earthing
- Insufficient contacts (main switch)
- Bulb gone

FREQUENT BURNING OF BULB

PROBABLE CAUSES

- Light relay/diode defective
- Incorrect bulb
- Rectifier/regulator defective
- Wrong negative earthing
- Main switch defective
- Bulbs gone

DIRECTION INDICATORS FAIL TO TURN ON

PROBABLE CAUSES

- Wrong negative earthing
- Battery flat
- Defective direction indicator switch
- Indicator lamp relay defective
- Harness cut off
- Connector loose
- Bulb gone

DIRECTION INDICATORS FAIL TO TURN OFF

PROBABLE CAUSES

- Indicator lamp relay defective
- Insufficient battery capacity (battery almost flat)
- Bulb (front or rear) burnt out
- Direction indicator switch defective

DELAYED TURNING ON OF INDICATORS

PROBABLE CAUSES

- Indicator lamp relay defective
- Insufficient battery capacity (battery almost flat)
- Incorrect bulb
- Main switch or direction indicator switch defective

EXCESSIVE INDICATOR INTERMITTENCE FREQUENCY

PROBABLE CAUSES

- Incorrect bulb
- Indicator lamp relay defective

THE HORN FAILS TO WORK

PROBABLE CAUSES

- Battery flat
- Main switch or horn switch defective
- Horn wrongly set
- Defective horn
- Harness cut off

OVERHEATING OF ENGINE

PROBABLE CAUSES

Ignition system
- Incorrect electrode gap of spark plug
- Spark plug thermal gradation wrong
- Ignition unit defective

Fuel feed system
- Incorrect carburetor main jet (incorrect setting)
- Incorrect fuel level
- Air filter element obstructed

Engine compression
- Excess of carbon deposits

Engine oil
- Incorrect oil level
- Incorrect oil viscosity
- Incorrect oil gradation

Brake
- Pads fail to return freely (remains blocked)

TT600RE WIRING DIAGRAM

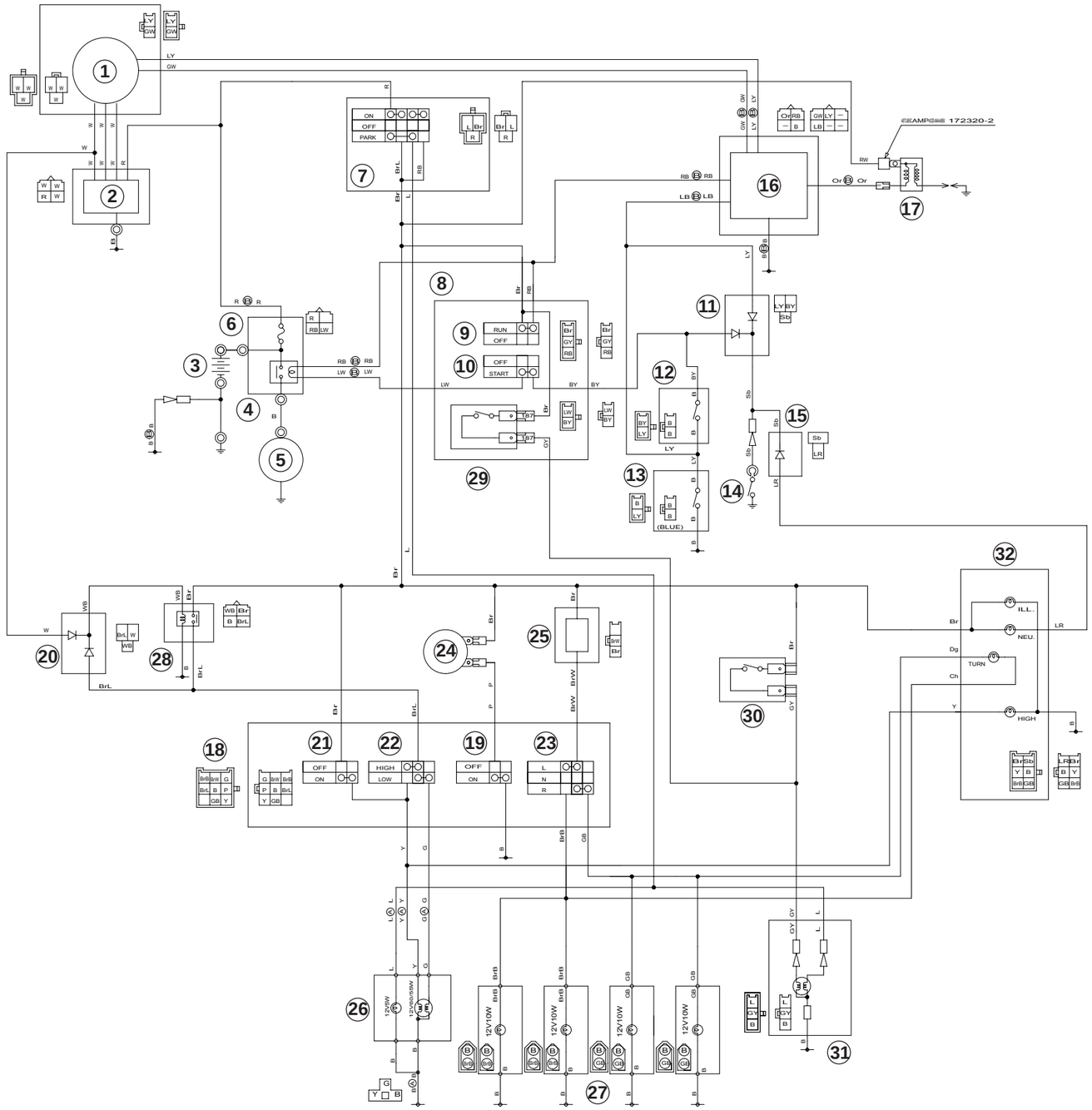

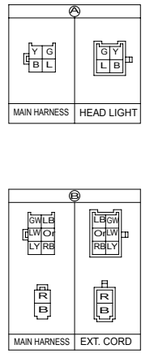

ELECTRICAL SYSTEM DIAGRAM

① AC generator/Pickup coil
② Rectifier/Regulator
③ Battery
④ Starter relay
⑤ Starting motor
⑥ Fuse
⑦ Main switch
⑧ Right handlebar switch
⑨ Engine stop switch
⑩ Starter switch
⑪ Diode
⑫ Clutch switch
⑬ Sidestand switch
⑭ Neutral switch
⑮ Diode
⑯ Ignitor unit
⑰ Ignition coil
⑱ Left handlebar switch
⑲ Horn switch
⑳ Diode
㉑ Pass switch
㉒ Dimmer switch
㉓ Flasher switch
㉔ Horn
㉕ Flasher relay
㉖ Headlight
㉗ Flasher light
㉘ Relay assy
㉙ Front brake switch
㉚ Rear brake switch
㉛ Tail/stop light
㉜ Meter

COLOR CODE

B .....Black	Gy .....Gray	R.....Red	B/W.....Black/White	Br/Y.....Brown/Yellow	
Br .....Brown	L.....Blue	Sb .....Sky blue	B/Y.....Black/Yellow	L/B .....Blue/Black	R/B.....Red/Black
Ch .....Chocolate	Lg.....Light green	W.....White	Br/B.....Brown/Black	L/R .....Blue/Red	R/G .....Red/Green
Dg .....Dark green	O.....Orange	Y .....Yellow	Br/L .....Brown/Blue	L/W .....Blue/White	R/W.....Red/White
G.....Green	P .....Pink	B/L .....Black/Blue	Br/W.....Brown/White	L/Y .....Blue/Yellow	R/Y.....Red/Yellow